ORDER NO. AVS87052010C1
D7

Service Manual

Post Production and Rec g Console

7565

WR-8428

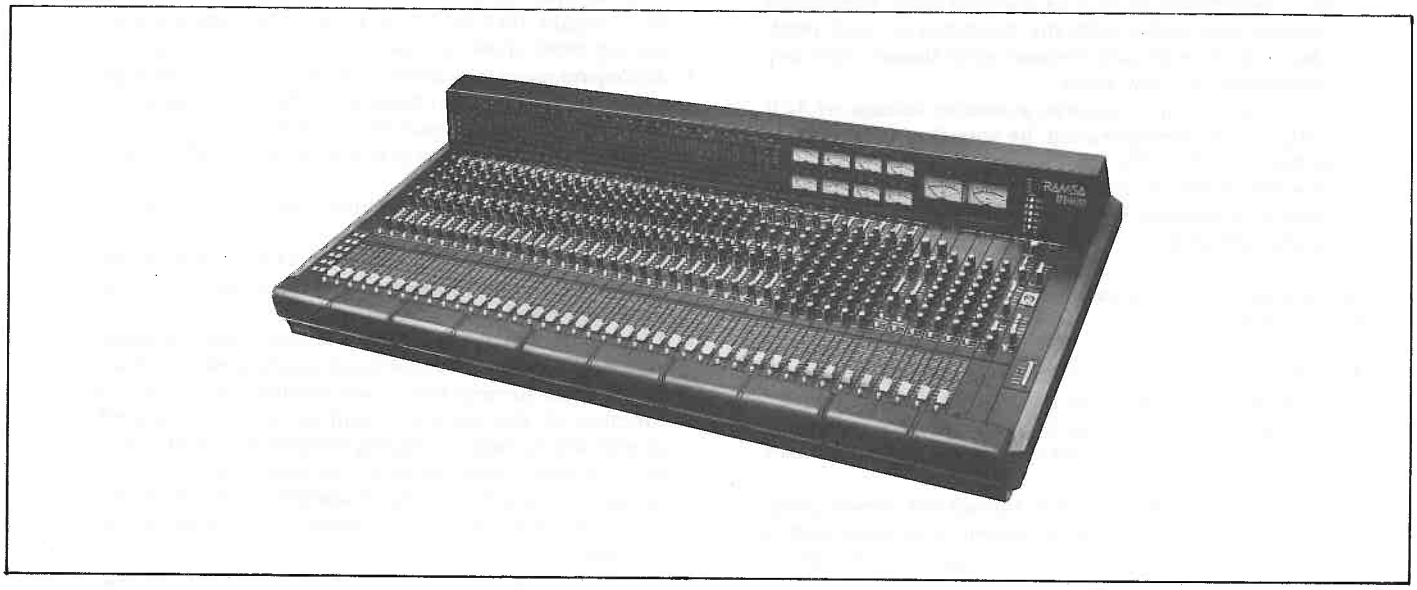

CONTENTS

IMPORTANT NOTICE 1
SPECIFICATIONS 1
MONO INPUT MODULE WU-8111 3
STEREO INPUT MODULE WU-8116 4
BASIC GROUP/SEND MODULE WU-8117 5
TAPE MONITOR GROUP/SEND MODULE WU-8112 6
MATRIX MODULE WU-8118 7
MASTER MODULE WU-8113 8
MONITOR/MONO MODULE WU-8114 9
T.B/OSC MODULE WU-8115 10
METER PANEL 11
REAR PANEL 12
REMOTE CONTROL SWITCHES/
REC OUTPUT SWITCHES 14
CABLE CONNECTIONS TO IN/OUT CONNECTOR 16
LEVEL DIAGRAM 17
BLOCK DIAGRAM 18
OPERATION CHECK 19
DISASSEMBLY 35
ADJUSTMENT 37
CIRCUIT BOARD AND WIRING CONNECTION DIAGRAM/. .
SCHEMATIC DIAGRAM 38
TOTAL CONNECTION DIAGRAM OF WR-8428 73
EXPLODED VIEW OF WR-8428/PACKING 74
REPLACEMENT PARTS LIST 80

Panasonic

Panasonic Industrial Company
Division of Matsushita
Electric Corporation of America
One Panasonic Way,
Secaucus, New Jersey 07094

Matsushita Electric
of Canada Limited
5770 Ambler Drive, Mississauga,
Ontario, L4W 2T3

Panasonic Sales Company,
Division of Matsushita Electric
of Puerto Rico, Inc.
Ave. 65 De Infanteria, KM9.7
Victoria Industrial Park
Carolina, Puerto Rico 00630

Panasonic Hawaii, Inc.
91-238 Kauhi Street Ewa Beach
P.O. Box 774
Honolulu, Hawaii 96808-0774

IMPORTANT NOTICE

Read the following section carefully to insure safe and proper use of the mixer and power supply.

NEVER INSE[illegible]R REMOVE MODULES FROM THE MAINFRAM[illegible]N THE POWER IS TURNED ON. BE SURE TO TURN THE POWER OFF OR DAMAGE TO THE MODULE WILL RESULT.

- **In some cases, certain switches or jacks may not function, depending on module configuration. Familiarize youself thoroughly with the functions of each module, and if necessary consult your dealer with any questions you may have.**
- **The power supply requires a source voltage of 120 VAC. For proper operation, be sure the AC service is within 120V ± 10%.**
- **The WU-8085 DC power supply units gets hot under normal operation. Be sure to install it in a well-ventilated area.**

Be careful of the following when using phantom power supply (48V):

- A 48 volt potential exists between pins 2 and 1 and between pins 3 and 1 of the MIC IN XLR connector. Turn on the phantom swithch only after a connector has been inserted into that channel in order to prevent shocks.
- Keep the phantom switch turned off when using microphones which are not meant to be used with a 48 volt phantom power supply, such as unbalanced microphones.

CAUTIONS

- Be especially careful to keep the phantom switch turned off when using an unbalanced type microphone or when any other type equipment is connected to the MIC INPUT connector. Failure to do so may result in damage, smoke, or fire.
- When the phantom power supply is on, set the CHANNEL ON switch to off position and set the fader to "infinity" whenever inserting or removing connectors to avoid popping sound.
- The maximum phantom current supply per MONO INPUT module (WU-8111) is 10 mA. Microphones requiring more than 10 mA will not operate properly.
- A popping noise may occur if the phantom power supply is turned on when there is nothing connected to that channel's MIC Input. This is due to charging current of the input capacitor and is not a sign of trouble.

- Use only high quality shielded cable for all audio input and output cables.
- Be sure the DC power supply unit is connected to the mainframe before plugging in the AC power cord and turning the unit on.
- There is no signal output from the mixer until the power supply has become stabilized (approximately 4 seconds after turning the power switch on). This is a function of the muting circuit in order to prevent potentially damaging popping noises through the system speakers when turning the power on.
- Be sure to keep the oscillator switch turned off when not using the internal oscillator to prevent signal leakage.
- The XLR connectors on the mixer are wired as follows:
  PIN 1–SHIELD
  PIN 2–HOT
  PIN 3–COLD

TECHNICAL SPECIFICATIONS

Frequency Response:		
MIC Input to Group Output:	+0.5dB, –2dB, 20Hz to 20kHz at nominal level setting, EQ HPF "PASS"	
LINE Input to Group Output:	+0.5dB, –1.0dB, 20Hz to 20kHz at nominal level setting, EQ HPF "PASS"	
Total Harmonic Distortion:		
MIC, LINE Input (Level Control at "–60", Faders are at "0" Position) +20dB at Balanced Output/600 ohms	less than 0.05%, 20Hz to 20kHz	
SMPTE I.M.D.:		
MIC, LINE Input (Level Control at "–60", Faders are at "0" Position) +20dB at Balanced Output/600 ohms	less than 0.05%, 20Hz to 20kHz	
Noise (20Hz to 20kHz NBW)		
Equivalent Input Noise:	less than –125dB (20Hz to 20kHz NBW)	
Source = 150 ohms	less than –127dB (IHF A Wtd.)	
MIC Input to Group Output:	MIC Input Level Control at "–60"	
Matrix Output:	Matrix Fader at Minimum:	Less than –90dB
Group Output:	Group Fader at Minimum:	less than –90dB
	Group Fader at Nominal:	
	All channel assign switches off:	less than –80dB
Master Output:	Master Fader at Minimum:	less than –90dB
	Master Fader at Nominal	
	All channel assign switches off:	less than –77dB

Maximum Voltage Gain:

(1) Mono Input:

MIC Input to GROUP Output:	84dB ± 1.5dB at 1kHz, 10 kohms
MIC Input to MATRIX Output:	94dB ± 1.5dB at 1kHz, 10 kohms
LINE Input to GROUP Output:	40dB ± 1.5dB at 1kHz, 10 kohms
LINE Input to MATRIX Output:	50dB ± 1.5dB at 1kHz, 10 kohms

(2) Stereo Input

LINE Input to GROUP Output:	50dB ± 1.5dB at 1kHz, 10 kohms
LINE Input to MATRIX Output:	60dB ± 1.5dB at 1kHz, 10 kohms

Maximum Output Level:

Balanced Output: more than +24dB
THD less than 0.1%, 20Hz to 20kHz at 600 ohms

Crosstalk (20Hz to 20kHz NBW):

Mono Input to Group Master L,R Output: Greater than 60dB at 10kHz
PB Input to Master L, R Output: Greater than 60dB at 10kHz
Other Combinations (Channel separation): Greater than 60dB at 10kHz
Stereo Input to Group Master L, R Output: Greater than 60dB at 10kHz

Common Mode Rejection Ratio:

MIC Input Level at −60: Greater than 70dB at 10kHz
LINE Input Level at −16: Greater than 40dB at 10kHz

Equalization:

(1) Mono Input:
a) High: ±15dB 4kHz to 16kHz Sweepable Shelving type
b) Mid: ±15dB 400Hz to 6.4kHz Sweepable Peak/Dip type
c) Low: ±15dB 40Hz to 600Hz Sweepable shelving type
d) H.P.F.: −18dB/oct cut off at 80Hz

(2) Stereo Input:
a) High: ±15dB 10kHz Shelving type
b) Low: ±15dB 100Hz Shelving type
c) H.P.F.: −18dB/oct cut off at 80Hz
d) L.P.F.: −12dB/oct cut off at 8kHz

Mixing Buses: Group 4 Effect 2
Master 2 Solo 1
Send 2

Meter: 24 x 12 Point LED Bar Graph
10VU Meter (with Peak LED)

Phantom Power: +48V DC Regulated

Power Consumption: 120V AC, 60Hz, Approx. 600W (used with WU-8085)

Dimension: 58-1/8"(W) x 10-7/16"(H) x 31"(D)
1477.5(W) x 265(H) x 787.4(D) mm

Weight: Approx. 216 lbs (98 kg)

* 0dB is referenced to 0.775V
Weight and dimensions shown are approximate.
Specifications are subject to change without notice.

* The value of power consumption and weight are in the following module configuration.

WU-8111 x 24 pcs.	WU-8113 x 2 pcs.
WU-8116 x 4 pcs.	WU-8114 x 1 pcs.
WU-8112 x 6 pcs.	WU-8115 x 1 pcs.
WU-8118 x 4 pcs.	

Accessories

Fader knob (White) 1
Fader knob (Blue) 2
Fader knob (Gray) 1
Fader knob (Red) 1
Name sheet 1
Warranty card 1
Service center list 1
Connector (Male) 4
Connector (Female) 4
D sub hood 8

• Input Specifications

Connection	Input level		Maximum voltage gain	Actual load impedance	Indicated impedance	Nominal impedance of products connected	Used connector	Adaptable connector
	Nominal	Maximum before clip						
Mic in	−60dB ~ −2dB	−40dB ~ +18dB	+84 ~ +26dB (Group, Master) +94 ~ +36dB (Matrix)	5kΩ	5kΩ	150Ω ~ 600Ω	3-pin XLR-type female connector (Balanced)	3-pin XLR-type male connector
Line in	−16dB ~ +10dB	+4dB ~ +30dB	+40dB ~ +14dB (Group, Master) +50dB ~ +24dB (Matrix)	10kΩ	10kΩ	600Ω ~ 10kΩ	3-pin XLR-type female connector (Balanced)	3-pin XLR-type male connector
Stereo L, R	−26dB ~ +4dB	−6dB +24dB	+50dB ~ +20dB (Group, Master) +60dB ~ +30dB (Matrix)	10kΩ	10kΩ	600Ω ~ 10kΩ	3-pin XLR-type female connector (Balanced)	3-pin XLR-type male connector
Effect return in L, R	+4dB	+24dB	+10dB (Group) +20dB (Matrix)	10kΩ	10kΩ	600Ω ~ 10kΩ	Tip-ring-sleeve phone jack (Balanced)	Tip-ring-sleeve phone plug
Return in G1 to G4	+4dB	+24dB	+10dB (Group) +20dB (Matrix)	10kΩ	10kΩ	10kΩ	Tip-ring-sleeve phone jack (Balanced)	Tip-sleeve phone plug
Sub in L, R	+4dB	+24dB	+10dB (Master) +20dB (Matrix)	10kΩ	10kΩ	600Ω ~ 10kΩ	Tip-ring-sleeve phone jack (Balanced)	Tip-sleeve phone plug
Aux in L, R	+4dB	+24dB	+6dB Cout. room Studio out	10kΩ	10kΩ	600Ω ~ 10kΩ	3-pin XLR-type female connector (Balanced)	3-pin XLR-type male connector (Balanced)
Insertion return 1 to 28	0dB	+20dB	+24 ~ −30dB (Group) +34dB (Matrix)	10kΩ 3kΩ	10kΩ 3kΩ	600kΩ ~ 10 kΩ 3kΩ ~ 10kΩ	Tip-ring-sleeve phone jack T: return R: send S: earth (Unbalanced)	Tip-ring-sleeve phone plug (Tip terminal)
Insertion G1 ~ G4 Send L, R	−6dB	+20dB	+20dB (Group)	5kΩ	3kΩ	600Ω ~ 10kΩ	Tip-ring-sleeve phone jack T: return R: send S: earth (Unbalanced)	Tip-ring-sleeve phone plug (TIP TERMINAL)
Matrix 1 to 4	−6dB	+20dB	+30dB (Matrix)	3kΩ	3kΩ	3kΩ ~ 10k Ω		
PB in 1 to 24	+4dB	+24dB		10kΩ	10kΩ	600Ω ~ 10kΩ	25 pin D-sub type (Balanced)	25 pin D-sub type (Supplied)
Talk back	−60dB	−30dB	+60dB (T.B out)	5kΩ		150Ω ~ 600Ω	3-pin XLR-type female connector (Unbalanced)	

• Output Specifications

Connection	Output level		Indicated impedance	Nominal impedance of products connected	Used connector	Adaptable connector
	Nominal	Maximum before clip				
Group output 1 to 4	+4dB	+26dB (Balanced) +21dB (Unbalanced)	600Ω	More than 600Ω	3-pin XLR-type male connector Balanced	3-pin XLR-type female connector
Master output L, R	+4dB	+26dB (Balanced) +21dB (Unbalanced)	600Ω			
Mono Master output	+4dB	+26dB (Balanced) +21dB (Unbalanced)	600Ω			
Send output L, R	+4dB	+26dB (Balanced) +21dB (Unbalanced)	600Ω			
Studio output L, R	+4dB	+26dB (Balanced) +21dB (Unbalanced)	600Ω			
Control room output L, R	+4dB	+26dB (Balanced) +21dB (Unbalanced)	600Ω			
Effect output	+4dB	+26dB (Balanced) +21dB (Unbalanced)	600Ω		Tip-ring-sleeve phone jack (Balanced)	Tip-ring-sleeve phone plug
Direct output 1 to 24	+4dB	+21dB (Unbalanced)	600Ω		Tip-ring-sleeve phone jack (Balanced)	Tip-ring-sleeve phone plug
Matrix output 1 to 4	+4dB	+26dB (Balanced) +21dB (Unbalanced)	600Ω		3-pin XLR-type male connector (Balanced)	3-pin XLR-type female connector
OSC/T.B. output	+4dB	+21dB (T.B. MIC)	3kΩ	3kΩ or more	Tip-ring-sleeve phone jack (Unbalanced)	Tip-sleeve phone plug
Headphones	–	+21dB 1W(RL=75Ω 125mW (RL=600Ω)	–	75Ω~600Ω	Tip-ring-sleeve phone jack (Stereo)	Stereo phone plug (Tip-ring-sleeve) T: left R: right S: earth
Rec out 1 to 24	+4dB	+21dB	5kΩ	5kΩ or more	25 pin D-sub type (Unbalanced)	25 pin D-sub type
Insertion send 1 to 28	0dB	+21dB	3kΩ	3kΩ or more	Tip-ring-sleeve phone jack	Supplied
Insertion send G1~G4 send L, R matrix	−6dB				T: Regurn R: Send S:earth	Tip-ring-sleeve phone plug (Ring terminal)

MONO INPUT MODULE WU-8111

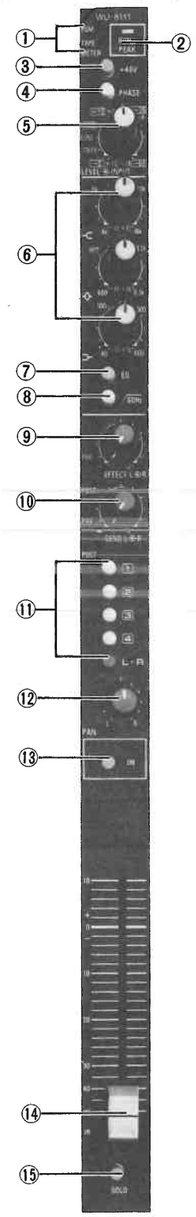

(This module is interchangeable with stereo input module WU-8116).

(1) Meter Select Switch
Selects which one of two signals is indicated on that channel's LED bar graph meter.
PGM:
The module's post-fader signal is sent to the bar graph meter.
TAPE:
The playback signal sent via the tape monitor section from the playback In multi-pin connector is indicated on the LED meter.

(2) Run/Peak LED
A dual-color LED that monitors the post-head amplifier signal or post-EQ signal, whichever is higher in level.
RUN LED (green):
Lights when signal level is between 37 dB and 6 dB below clipping level.
PEAK LED (red):
Lights when signal is within 6 dB of clipping level.

(3) 48V PHANTOM POWER SWITCH
On/off switch for 48 volt phantom power supply. It is used for condensor microphones designed to operate on 48 volts. An electronically controlled on/off circuit minimizes popping sounds when phantom power is turned on or off.

(4) PHASE SWITCH
Inverts the phase of the input signal. The phase switch functions on both the Line and Mic inputs.

(5) INPUT/LEVEL CONTROL
The inner knob adjusts the gain of the head amplifier stage. The variable range is −60 to −2 dB (MIC), −16 to +10 dB (LINE).
The outer knob is for input selection.
The MIC signal is input from the MIC/LINE L connector on the rear panel.
The LINE signal is input from the LINE/LINE R connector.
The TAPE signal is input from the PLAYBACK IN multi-pin connector, and is routed via the Tape Monitor module (WU-8112).
NOTE:
Does not function when the Basic Group/send Module is used for G1 to G4 and Send L and R. For details, see the cautions on usage.
There must be a Tape Monitor module in the corresponding position in order for the TAPE position of the input selector to function. The TAPE position will not function when:
* Input modules are in positions 25 to 28.
* BASIC GROUP module WU-8117 is in corresponding input position.
  For details, see Cautions on Usage.

(6) EQUALIZER
HIGH 4 kHz to 16kHz ±15 dB shelving
MID 400 Hz to 6.8 kHz ±15 dB peak/dip
LOW 40 Hz to 600 Hz ±15 dB shelving
The inner knob adjusts the level of cut/boost.
The outer knob adjusts the frequency.
For shelving, the indicated frequency is the point at which the amplitude is 3 dB less than the maximum cut or boost level.
For peak/dip, the indicated frequency is the point which has the maximum level of cut or boost.
For more information on equalizer characteristics, refer to page 33.

(7) EQ SWITCH
Equalizer on/off switch. EQ functions when pressed in, and is bypassed when in the out position.

(8) 80 Hz HIGH-PASS FILTER SWITCH
Pressing this switch activates an 80 Hz 18 dB/octave high-pass filter.
It is used to eliminate very low frequency rumbling type noise and vibration.

(9) EFFECT L/R CONTROLS
Controls the level of input signal sent to the EFFECT LEFT and RIGHT busses. The inner knob sets the signal level sent to the EFFECT LEFT bus; the outer knob to the EFFECT RIGHT bus.
The PRE/POST selector switch sets the signal takeoff point for both EFFECT busses:
PRE: post-EQ/pre-fader signal
POST: post-fader signal (turned on and off by CHANNEL ON switch)

(10) SEND L/R CONTROLS
Controls the level of input signal sent to the SEND LEFT and RIGHT busses. The inner knob sets the signal level sent to the SEND LEFT bus; the outer knot to the SEND RIGHT bus.
The PRE-POST selector switch sets the signal takeoff point for both SEND busses.
PRE: post-EQ/pre-fader signal
POST: post-fader signal (turned on and off by CHANNEL ON switch)

(11) PROGRAM BUS ASSIGN SWITCHES
These switches are used to route the input signal to any or all of the GROUPS 1 to 4 and L/R MASTER busses. The pan control must be used if a signal is to be sent to LEFT or RIGHT MASTER only.

(12) PAN POT CONTROL
This control is used to adjust the left/right balance of the signal sent to the master L and R. It is used to position a sound in the stereo field during mixdown.
The internal pan switch located on the printed circuit board enables panning between Groups 1 and 2, and between Groups 3 and 4.
Panning is in effect for L/R MASTER only upon shipment from the factory.

(13) CHANNEL ON SWITCH
When this switch is on, signal may be sent to all program (G1-G4, L/R MSTR) and auxiliary (SEND L/R, EFF L/R) busses. In the OFF position, signal to the busses and to the channel DIRECT OUT will be muted.
NOTE:
When the PRE/POST switches for the SEND L/R and EFFECT L/R are in the "pre" position, signal will be sent from those controls regardless of CHANNEL ON switch position.
Engaging the CHANNEL ON switch will mute the STUDIO OUTPUT when:
1) The Studio Mute switch on the rear of the console is turned on, and
2) The module is in input position 1, 2, 3, or 4.
A green indicator LED lights when the switch is engaged.

(14) INPUT FADER
A 100 mm stroke fader with reference dB level indications which allows precise input channel level setting.

(15) SOLO SWITCH
Individual channels may be easily monitored by the use of this switch.
The solo signal takes priority over what is being monitored by the Control Room outputs and the Headphone Output. In addition, the Right Master VU meter will automatically switch over to indicate the solo signal level when any solo button is pressed.
Any number of solo buttons may be pressed simultaneously to monitor groups of signals.
An indicator LED on the channel lights when the solo button is pressed.
Another LED on the WU-8114 Monitor module lights when any solo button is pressed.
The solo signal may be set to pre- or post fader by means of an internal switch.

MONO INPUT MODULE INTERNAL SWITCHES

FOR INTERNAL SWITCH LOCATIONS, REFER TO SECTION ON POSITION OF INTERNAL SWITCHES, PAGE 10.

PAN ON/OFF SWITCH (SW15)
This switch is for adding odd/even panning on GROUPS 1 to 4. GROUPS 1/2 and GROUPS 3/4 then become stereo pairs; 1 and 3 being the left channel, and 2 and 4 the right channel.
This switch is set to OFF upon shipment from the factory.

SOLO PRE/POST SWITCH (SW16)
Use this switch to select pre-fader or post fader as the takeoff point of the solo signal.
Set to PRE upon shipment from the factory.

STEREO INPUT MODULE WU-8116

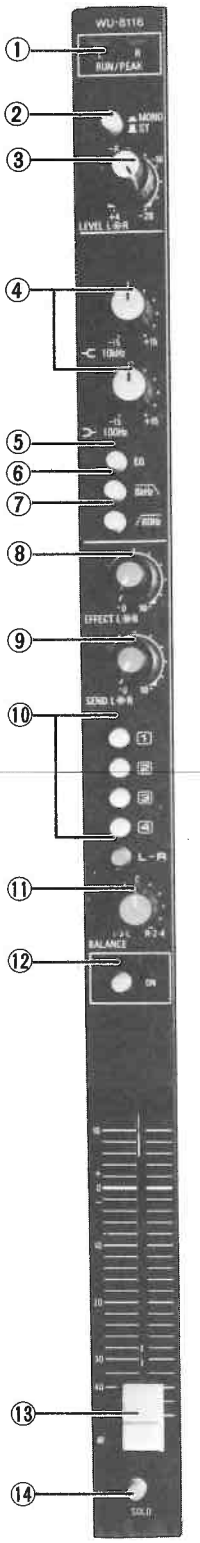

(This module is interchangeable with the mono input module WU-8111).

(1) RUN/PEAK LED's
A dual-color LED which monitors the post-head-amplifier signal level.
There are two RUN/PEAK LED's on this module; one each for LINE LEFT and LINE RIGHT.
RUN LED (green):
Lights when signal level is between 37 dB and 6 dB below clipping level.
PEAK LED (red):
Lights when signal is within 6 dB of clipping level.

(2) MONO/ST SWITCH
When this switch is engaged (MONO position), the module is effectively converted into a mono line input channel. Signals connected to either the LINE L or LINE R inputs will appear on both the left and right channel sections. When two separate signals are connected to the LINE L/R inputs and the MONO/ST switch is in the MONO position, the two signals will be summed into one mono signal.

(3) L and R LEVEL CONTROLS
These controls set the level of the two head amplifier stages. The inner knob is for the L input, the outer knob is for the R input.
The variable range is for input signals of −26 dB to +4 dB.

(4) EQUALIZER
HIGH 10 kHz ±15 dB shelving
LOW 100 Hz ±15 dB shelving
The EQ controls are dual-ganged, so that simultaneous adjustment of both the left and right signals is accomplished from one control.

(5) EQ SWITCH
Equalizer on/off switch. EQ functions when pressed in, and is bypassed when in the out position.

(6) 8 kHz LOW-PASS FILTER SWITCH
Pressing this switch activates an 8 kHz 12 dB/octave low-pass filter.
This is effective for eliminating high frequency noise such as tape hiss or static and scratch noise on records.

(7) 80 Hz HIGH-PASS FILTER SWITCH
Pressing this switch activates an 80 Hz 18 dB/octave high-pass filter.
It is used to eliminate very low frequency rumbling type noise and vibration.

(8) EFFECT L/R CONTROLS
Controls the level of input signal sent to the EFFECT LEFT and RIGHT busses. The inner knob sets the signal level sent to the EFFECT LEFT bus; the outer knob to the EFFECT RIGHT bus.
The EFFECT L and R are post-fader signals.
NOTE:
When the MONO/ST switch is in the ST (stereo) position, only signals from LINE IN L may be sent to the EFFECT LEFT bus. Likewise, only signals from LINE IN R may be sent to the EFFECT RIGHT bus.

(9) SEND L/R CONTROLS
Controls the level of input signal sent to the SEND LEFT and RIGHT busses. The inner knob sets the signal level sent to the SEND LEFT bus; the outer knob to the SEND RIGHT bus.
The SEND L and R are post-EQ/pre-fader signals.
NOTE:
When the MONO/ST switch is in the ST (stereo) position, only signals from LINE IN L may be sent to the SEND LEFT bus. Likewise, only signals from LINE IN R may be sent to the SEND RIGHT bus.

(10) PROGRAM BUS ASSIGN SWITCHES
These switches are used to route the channel signal(s) to the groups 1-4 and L/R MASTER busses. When the MONO/ST switch is in the ST (stereo) position, the LINE L signal may be sent to Group 1, Group 3, and L Master, and the LINE R signal may be sent to Group 2, Group 4, and R Master. When the switch is in the MONO position, either of the LINE L and R inputs may be sent to all of the busses.

(11) BALANCE CONTROL
Stereo mode:
Adjusts the balance between LINE L and R inputs selected by the program bus assign switches.
MONO mode:
Functions as a pan control to position a signal in the stereo field.

(12) CHANNEL ON SWITCH
When this switch is on, signal may be sent to all program (G1-G4, L/R MSTR) and auxiliary (SEND L/R, EFF L/R) busses. In the OFF position, signal to the busses will be muted.

(13) INPUT FADER
A 100 mm stroke stereo fader with reference dB level indications which allows precise input channel level setting.

(14) SOLO SWITCH
Individual channels may be easily monitored by the use of this switch.
The solo signal takes priority over what is being monitored by the Control Room outputs and the Headphone Output. In addition, the Right Master VU meter will automatically switch over to indicate the solo signal level when any solo button is pressed.
Any number of solo buttons may be pressed simultaneously to monitor groups of signals.
An indicator LED on the channel lights when the solo button is pressed.
Another LED on the WU-8114 Monitor module lights when any solo button is pressed.
When the WU-8116 is in solo mode, the solo signal is the sum of the LINE L and LINE R input signals.
The solo signal may be set to pre- or post-fader by means of an internal switch.

STEREO INPUT MODULE INTERNAL SWITCHES

FOR INTERNAL SWITCH LOCATIONS, REFER TO SECTION ON POSITION OF INTERNAL SWITCHES, PAGE 10.

SOLO PRE/POST SWITCH (SW16)
Use this switch to select pre-fader or post fader as the takeoff point of the solo signal.
Set to PRE upon shipment from the factory.

BASIC GROUP/SEND MODULE WU-8117

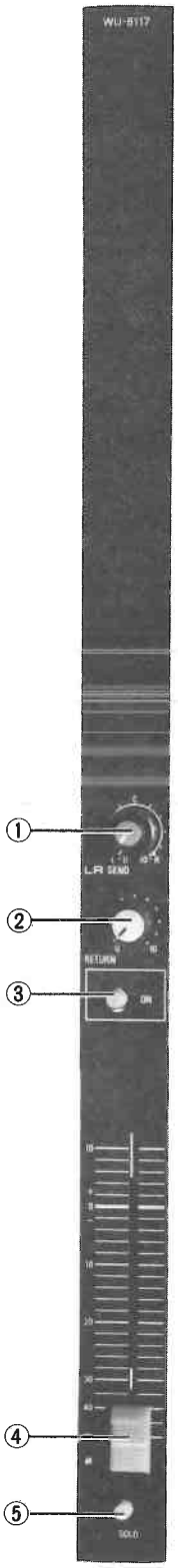

(This module is interchangeable with the tape monitor module WU-8112).

(1) L/R SEND CONTROL

This control sets the level of the post-group fader signal being sent to the L/R MASTER output. This function is useful for sub-mixing.
The inner knob adjusts signal level.
The outer knob is a pan control, allowing the GROUP signal to be divided into stereo L and R and positioned in the stereo field.

(2) RETURN CONTROL

The return control is for adjusting the level of an input signal connected to that group's RETURN IN jack, which is a direct bus input.
May be used as an effect return or an additional input.
RETURN IN 1 is for group 1, RETURN IN 2 is for group 2, etc.
Up to 6 RETURN INPUT signals may be connected (G1-G4, SEND L/R), but a group module must be present in the corresponding position in order for the RETURN IN jack to function.

(3) CHANNEL ON SWITCH

On/off switch for the group output. When the GROUP Output is on, a green indicator LED lights.

(4) FADER

A 100 mm stroke fader with reference dB level indications which allows precise group output level setting.

(5) SOLO SWITCH

Engaging this switch allows individual GROUP or SEND output signals to be easily monitored through the CONTROL RM L/R and Headphone outputs.
A red indicator LED lights when SOLO is on.

NOTE:
When using this module as the SEND L or SEND R Output module, replace the-fader knob with a blue knob, which is provided with the mainframe as an accessory. This allows clear distinction between GROUP and SEND output modules.

TAPE MONITOR GROUP/SEND MODULE WU-8112

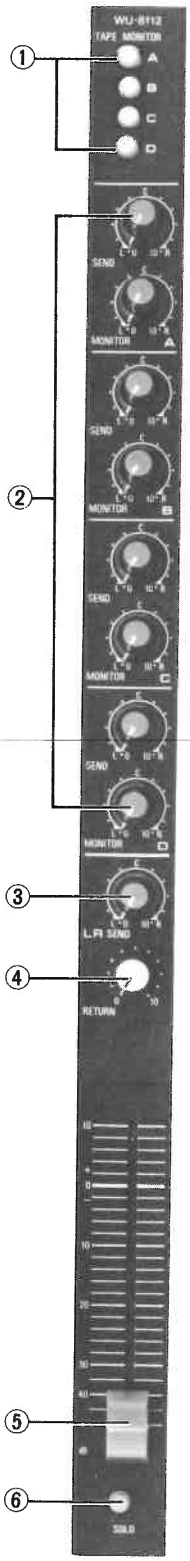

(This module is interchangeable with the basic group module WU-8117).

This module has two major functions:
1) GROUP/SEND Output–This portion has the same functions as the WU-8117 Basic Group module.
2) Tape Monitor–This portion controls the level and panning for monitoring of multi-track tape signals input from the Playback In multi-pin connector.

The tape monitor section of each WU-8112 module is a 4-in, 4-out mixer.
Input signals are sent to the module from the Playback In connector, and the four available outputs are L/R Master and SEND L/R. This configuration allows two simultaneous, independent mixes. For example, one mix may be used for the mixing engineer in the control room, while another different mix may be fed into the studio.
Another way this module may be used is for 48-track mixdown to stereo.
Up to 24 tracks may be input via the Playback In connector and mixed down to the stereo master busses by the MONITOR controls on the WU-8112. The SEND controls on the WU-8112 can be used to route these tracks to the SEND L/R busses to be used for foldback or as a send to effect devices. The remaining tracks can be input via the LINE INPUTS of the input section of the mixer and mixed to the master busses by the program bus assign switches. The SEND control of the input channels are then used for foldback or effects send; thus 48 track mixdown is accomplished.

The Tape Monitor module (WU-8112) and Basic Group module (WU-8117) can be used in combination. The number of Tape Monitor modules to be used may be determined by the multi-track recorder. Since each Tape Monitor module monitors four tracks, you should use one module for a 4-track machine, two modules for an 8-track, four modules for a 16-track, and six modules for a 24-track.

(1) TAPE MONITOR SWITCHES
Each of these switches turn the tape monitor function on or off for one individual channel of playback signal coming in through the Playback In connector. Letters A through D are used to label the four tape monitor channels on each WU-8112 module. Stickers with the numbers 1 to 24 are provided to be placed over the letters A through D so that which track is being controlled by each section may be easily distinguished.
The following chart shows the relation between module position and tracks which may be monitored.

Module No.	Tape Monitor Switch				PB.IN Connector
	A	B	C	D	
G1	IN 1	IN 2	IN 3	IN 4	PB.IN 1 to 8
G2	IN 5	IN 6	IN 7	IN 8	
G3	IN 9	IN 10	IN 11	IN 12	PB.IN 9 to 16
G4	IN 13	IN 14	IN 15	IN 16	
Send	IN 17	IN 18	IN 19	IN 20	PB.IN 17 to 24
Send	IN 21	IN 22	IN 23	IN 24	

(2) TAPE MONITOR CONTROLS
There are four sets of Tape Monitor controls on each WU-8112 module.
Each set adjusts monitor and send levels for one tape track, and consists of the following controls:

Send–The inner knob sets the level of signal being sent to the SEND L/R busses. The outer knob is for panning between the SEND Left and Right busses. These controls may be used to obtain a cue signal, or as effect sends if the monitor section is being used for 2-track mixdown as previously described.

Monitor–The inner knob sets the level of signal being sent to the L/R MASTER busses. The outer knob is for panning between the MASTER Left and Right busses. This allows you to do a rough mix of the multi-track tape signal to check recording quality, or to set the level of each track for mixdown to 2-track.

(3) L/R SEND CONTROL
This control sets the level of the post-group fader signal being sent to the L/R MASTER output. This function is useful for sub-mixing.
The inner knob adjusts signal level.
The outer knob is a pan control, allowing the GROUP signal to be divided into stereo L and R and positioned in the stereo field.

(4) RETURN CONTROL
The return control is for adjusting the level of an input signal connected to that group's RETURN IN jack, which is a direct bus input.
May be used as an effect return or an additional input.
RETURN IN 1 is for group 1, RETURN IN 2 is for group 2, etc.
Up to 6 RETURN INPUT signals may be connected (G1-G4, SEND L/R), but a group module must be present in the corresponding position in order for the RETURN IN jack to function.

(5) FADER
A 100 mm stroke fader with reference dB level indications which allows precise group output level setting.

(6) SOLO SWITCH

Engaging this switch allows individual GROUP or SEND output signals to be easily monitored through the CONTROL RM L/R and Headphone outputs.
A red indicator LED lights when SOLO is on.

NOTE:
When using this module as the SEND L or SEND R Output module, replace the-fader knob with a blue knob, which is provided with the mainframe as an accessory. This allows clear distinction between GROUP and SEND output modules.

MATRIX MODULE WU-8118

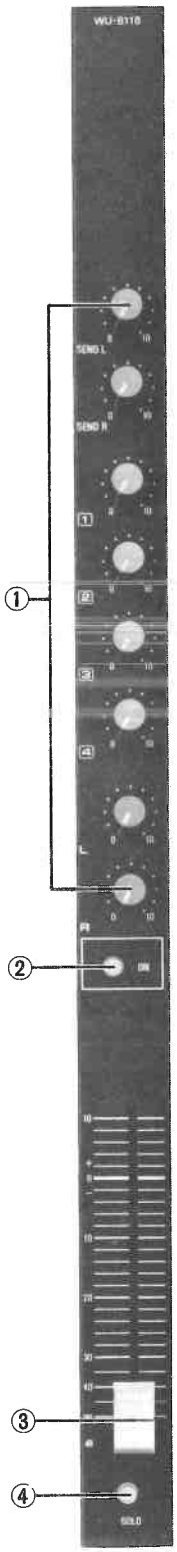

(1) LEVEL CONTROLS
Groups 1 to 4 Master L and R, and Send L and R outputs may be mixed together into one output by the Matrix module. These eight output signals can be set to the desired mixing balance using these controls.

(2) CHANNEL ON SWITCH (Matrix Output on/off switch)
The mixed matrix output is turned on and off by this switch. When turned on the green LED lights.

(3) MATRIX FADER
This adjusts the overall matrix output level. The 100 mm stroke decibel (dB) scale allows for precise adjustment.

(4) SOLO SWITCH
Use this switch to monitor the matrix signal through the Control Room and Headphone outputs. When in solo mode, the red LED lights.
An internal switch on the printed circuit board sets the solo signal takeoff point to either pre- or post-fader.

MATRIX MODULE INTERNAL SWITCH

SOLO PRE/POST SWITCH (SW3)
A circuit board mounted switch which selects pre- or post-fader solo.
This switch is set to the pre- position upon shipment from the factory.

MASTER MODULE WU-8113

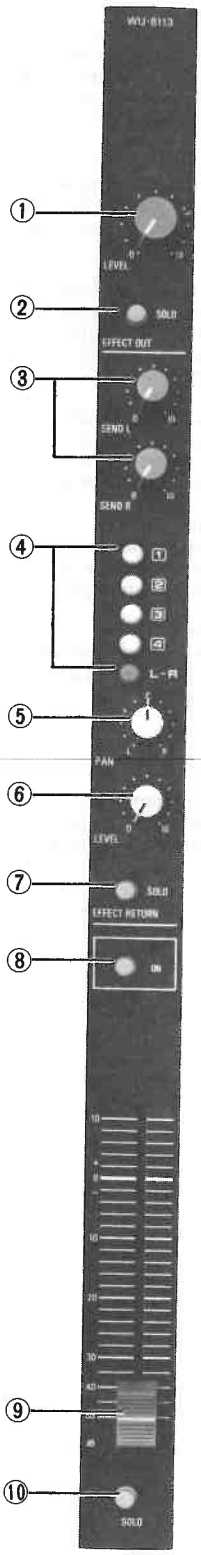

(1) EFFECT OUT CONTROL
This is the master level control for signals sent to the Effect bus from the input channels. The control on the L Master module is for the Effect L bus, and the one on the R Master is for the Effect R bus. A line marker at approximately 2 o'clock position indicates nominal setting position. Turning the control to maximum increases the level 6 dB higher than nominal.

(2) EFFECT SOLO SWITCH
Use this switch to monitor the EFFECT OUT signal by the CONTROL RM outputs or Headphones. The Effect Out Solo is a post-master control signal. When turned on, the red LED lights.

*** EFFECT RETURN SECTION**
Numbers 3 to 7 are controls for the Effect Return section. This section may be used to control signals from the output of an effects device, or as an additional line level input. There are two EFFECT INPUT jacks on the rear panel, the signal connected to each one being controlled by one of the two Master modules.

(3) SEND L/R CONTROL
These controls set the level of the Effect Return signal to be sent to the SEND LEFT and SEND RIGHT busses. The inner knob is for sending to the SEND LEFT bus, the outer to the SEND RIGHT bus.
The Send signal is derived pre-Effect Return Level control.

(4) ASSIGN SWITCHES
These switches are for routing the EFFECT RETURN signal to the GROUP 1-4 and L/R MASTER busses. These switches are post-EFF RET Level control.

(5) PAN CONTROL
Divides the Effect Return signal into left and right for positioning in the stereo field using the L/R MASTER busses. Odd/Even panning on GROUPS 1-4 can also be accomplished by setting the Pan On/Off switch, located on the printed circuit board, to the ON position.

(6) EFFECT RETURN LEVEL CONTROL
Master level control for the Effect Return signal.

(7) EFFECT RETURN SOLO SWITCH
Use this switch to monitor the Effect Return signal through the CONTROL RM outputs or headphones. A red LED indicates when SOLO is active.
The Effect Return solo signal is pre-Effect Return Level control.

(8) CHANNEL ON SWITCH (Master Output On/Off Switch)
Enables or mutes the Master Output. A green LED indicates when the output is on.

(9) MASTER FADER
Controls the output level of the MASTER bus. The 100 mm stroke decibel (dB) scale allows precise level adjustment.

(10) MASTER SOLO SWITCH
Use this switch to monitor the pre-fader Master Output signal through the Control Rm. output or headphones. A red indicator LED lights when in solo mode.

MASTER MODULE INTERNAL SWITCH

PAN ON/OFF SWITCH (SW10)
This switch is for adding odd/even group panning to the EFFECT RETURN section, GROUPS 1/2 and GROUPS 3/4 then become stereo pairs, 1 and 3 being the left channel, and 2 and 4 the right channel. This switch is set to OFF upon shipment from the factory.

FOR INTERNAL SWITCH LOCATIONS, REFER TO SECTION ON POSITION OF INTERNAL SWITCHES, PAGE 10

MONITOR/MONO MODULE WU-8114

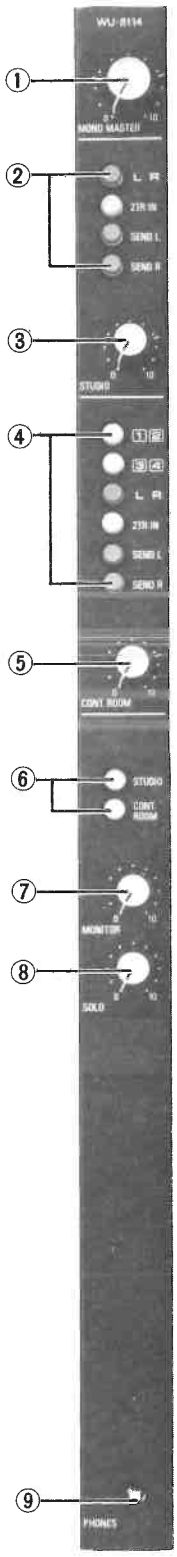

(1) MONO MASTER CONTROL
Sets the level of the signal sent to the MONO Output connector.
The mono signal is the sum of the Left and Right Master Output signals. Either or both of the master faders must be raised in order for signal to be present at the Mono Master control.

(2) STUDIO MONITOR SELECTOR SWITCHES
These switches select the signal to be sent to the STUDIO L/R outputs. Master L and R, SEND L, SEND R, and 2-TR IN are available for studio monitoring.
The MASTER L and R, and 2-TR IN signals are in stereo at the Studio outputs. SEND L and SEND R are monaural.
The 2-TR IN signals are input from a rear panel connector.

(3) STUDIO CONTROL
This control adjusts the level of the STUDIO L and R outputs.

(4) CONTROL ROOM MONITOR SELECTOR SWITCHES
These switches select the signal to be sent to the CONTROL ROOM L/R outputs. Groups 1/2, Groups 3/4, Master L/R, 2-TR IN, Send L, and Send R are available for control room monitoring.
The Group 1-4 control room signals are pre-group fader signals.
The GROUP 1-4, MASTER L AND R, and 2-TR IN signals are in stereo at the control room outputs. SEND L and SEND R are monaural.
The 2-TR IN signals are input from a rear panel connector.

(5) CONTROL ROOM LEVEL CONTROL
This control adjusts the level of the CONTROL ROOM L and R outputs.

(6) HEADPHONE SELECTOR SWITCHES
Selects either the Studio or Control Room signal to be sent to the Headphone output.

(7) HEADPHONE VOLUME CONTROL
Adjusts the level of the headphone signal.

(8) SOLO LEVEL CONTROL
Sets the solo signal level before it is sent to the Control Room, and Headphone circuits. Use it to match levels when switching between normal and solo modes.
The red LED beneath the solo level control lights to indicate solo mode whenever any solo button on the console is pressed in.

(9) HEADPHONE JACK
A standard 1/4" phone jack for stereo headphones.

NOTES ON MONITOR MODULE OPERATION

The Mono Master, Studio, Control Room, and Solo level controls each have a line marker at approximately 2 o'clock position on the control panel. This indicates nominal level setting position for those controls. Setting these controls to maximum increases the level by another 6 dB above nominal.
When in solo mode, the Control Room and Headphone outputs automatically switch over to solo monitoring. At the same time, the Right Master VU meter automatically switches to indicate solo signal level.

The Solo Level control is located before the Control Room and Headphone controls in the signal path. If the Solo control or the Control Room/Headphone controls are at minimum ("0" position), no solo signal will be heard at those outputs.

The selector switches on this module (2, 4, and 6) are interlocked, so that only one switch in each bank may be selected at a time. If two or more are accidently pressed at one time, priority is as follows:

a) Studio Monitor Select Switches (2)
L/R Master has priority if pressed simultaneously with other buttons. No other signal will be passed when multiple buttons are engaged.

b) Control Room Selector Switches
Group 1/2 has priority if pressed simultaneously with other buttons. No other signal will be passed when multiple buttons are engaged.

c) Headphone Selector Switches
The Control Room signal has priority.

Use stereo headphones with an impedance of 75 to 600 ohms. 8 ohms headphones can be used, but an internal limiter circuit may be activated, resulting in sound quality deterioration.

T.B/OSC MODULE WU-8115

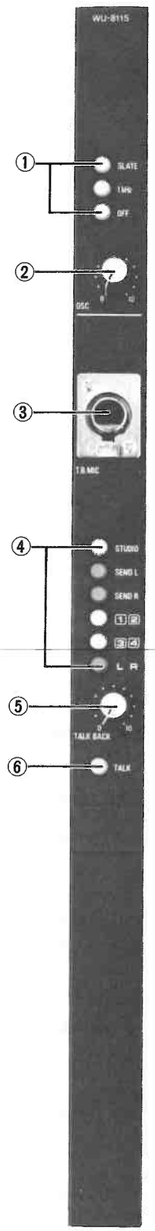

(1) OSCILLATOR FREQUENCY SELECTOR SWITCHES
SLATE (80 Hz)-used as a control signal when searching through tape at high speed (rewind, fast forward).
1 kHz-a test tone used for calibration and level setting.
OFF-turns off internal oscillator. This switch must be engaged in order for talkback circuit to operate.

(2) OSC (Oscillator Level Control)
Sets the internal oscillator level.
An oscilator output jack is provided on the rear panel.

(3) T.B MIC CONNECTOR
A standard XLR microphone connector for connection of a talkback microphone.

(4) ASSIGN SWITCHES
These switches route the oscillator and talkback signals to the Group 1-4, L/R Master, Send L, and Send R busses, and also directly to the Studio Outputs. These are individual switches, so that the signal can be sent to any or all of these outputs at one time.

(5) TALKBACK LEVEL CONTROL
Adjusts the level of the talkback signal.

(6) TALK BUTTON
A momentary-on switch which turns on the talkback function while depressed. The "OFF" button of the oscillator frequency select switches (1) must be engaged in order to activate talkback.
When in talkback mode, the talkback signal will appear at the OSC Output jack.

NOTES ON TALKBACK/OSCILLATOR OPERATION

* Keep the oscillator turned off when not in use to prevent signal leakage.
* The Slate and 1 kHz tones may differ in level by approximately 1 or 2 dB. This is not a sign of equipment trouble.
* The Control Room output signal is attenuated by approximately 20 dB when the TALK switch is depressed. This is to prevent feedback between the talkback microphone and the control room monitor speakers.
* When the talkback signal is assigned to the Studio Output, the talkback signal takes priority over the studio signal. The signal present at the Studio Output will therefore be muted while the TALK switch is depressed.

TALKBACK/OSC MODULE INTERNAL CONTROLS

TALKBACK LEVEL
Varies the sensitivity of the Talkback-microphone circuit.
Variable from −60 dB to −45 dB.
Set to −60 dB upon shipment from the factory.

OSC Level
Sets the level obtainable when the external oscillator level control is at maximum.
Set to 1 kHz +4 dB upon shipment from the factory.

METER PANEL

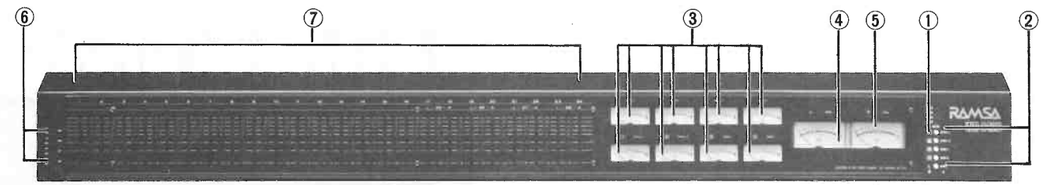

(1) POWER INDICATOR LAMPS
Indicator LED's for the four power supply voltages of +48V, ±15V, and +12V.

(2) VU METER SELECTOR SWITCHES
These switches select the signal to be monitored by each of the VU Meters (except Matrix Output meters). Signals available for each meter are GROUP 1/EFFECT L, GROUP 2/EFFECT RIGHT, GROUP 3/SEND L, GROUP 4/SEND R, MASTER L/MONO.
* The four Matrix Output meters are fixed to monitor only those outputs.
* The Master R VU meter switches automatically to monitor Solo whenever any solo button on the console is pressed.

(3) VU METER
Level indicators for the signal busses. 0 VU indicates rated level of +4dB.

(4) PEAK LED
An LED mounted on the face of the VU meter to indicate peak levels of too short duration for VU indication. Lights at levels within 6dB of clipping.

(5) METER SELECTOR INDICATOR LED
Indicates the signal being monitored by each VU meter which has been selected by the Meter Selector switches.

(6) LED METER SELECTOR SWITCHES
Selects metering mode of the eight right-most LED bar graph meters for either mono monitoring on inputs 17-24 or stereo monitoring on inputs 25-28.

(7) 12-POINT LED METERS
LED bar graph meters for monitoring input signals. The signals being monitored varies. See Figure 1.

NOTES ON METER MONITORING

- When Mono Input modules (WU-8111) are inserted into positions 25 to 28, the level is indicated on the right side of the bar graph pair.
- When Stereo Input modules (WU-8116) are inserted into positions 1 to 24, the signal indicated on the LED bar graph meter is the sum of the left and right input signals; regardless of the position of the MONO/ST switch on the module.
- The 0dB position on the LED meters indicates a signal level of +4dB. The lowest step on the bargraph is −20dB, which indicates actual signal level of −16dB. There is no signal indication at levels lower than −16dB.
  The highest level indicated is +8dB, or +12dB actual signal level. When the +8dB light first turns on, another 12dB of headroom is available.

LED Meter Selectors

LED METER	Monitored Signal	
	For Mono Input WU-8111	For Stereo Input WU-8116
LED Meters 1 - 16	Tape or PGM signal is monitored, depending on position of meter selector switch on mono input module. Tape is the signal input via the Playback In connector. PGM is the post-input fader LINE or MIC IN signal.	The L and R pre-EQ pre-fader signals are summed and indicated as a monaural signal level.
LED Meters 17 - 24	INPUT POSITIONS 17-24: Tape or PGM signal is monitored, depending on position of meter selector switch on mono input module. Tape is the signal input via the Playback In connector. PGM is the post-input fader LINE or MIC IN signal. INPUT POSITIONS 25-28: The signal selected by the PGM/TAPE switch is indicated on the right channel bar graph meter only.	INPUT POSITIONS 17-24: The L and R pre-EQ pre-fader signals are summed and indicated as a monaural signal level. INPUT POSITIONS 25-28: L and R pre-EQ pre-fader signals are indicated.

NOTE: For input modules in positions 17-28, the LED meter selector switches must be in the appropriate positions to monitor the desired signals.

REAR PANEL

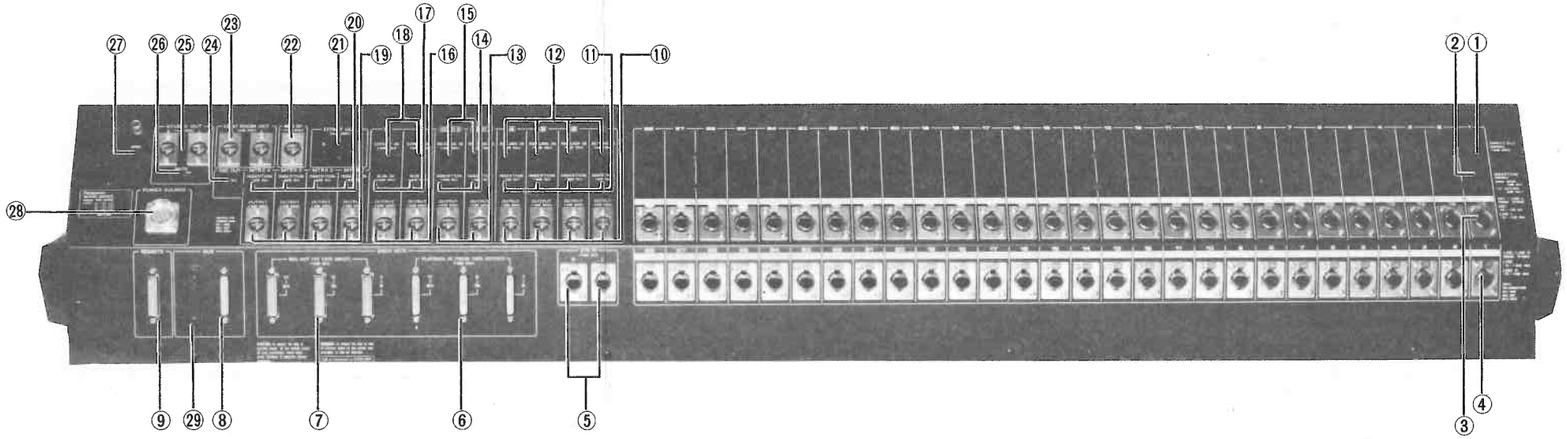

NOTE:
For Input/Output levels, impedance, and connector types, see input and output specifications, pages 30 - 32.

(1) DIRECT OUT
A line level post-channel fader output.
FUNCTIONS ONLY WHEN WU-8111 MONO INPUT MODULE IS IN CORRESPONDING POSITION.

(2) INSERTION
A post-EQ pre-fader channel patch point for the connection of signal processing, such as compressor, limiter, equalizer, etc.
A TRS 1/4-inch phone plug is used, wired as:

TIP:	Return
RING:	Send
SLEEVE:	Ground

FUNCTIONS ONLY WHEN WU-8111 MONO INPUT MODULE IS IN CORRESPONDING POSITION.

(3) INPUT CONNECTORS (top)
1) For MONO INPUT MODULE: MIC Input
2) For STEREO INPUT MODULE: LINE L input

(4) INPUT CONNECTORS (bottom)
1) For MONO INPUT MODULE: LINE Input
2) For STEREO INPUT MODULE: LINE R Input

(5) 2-TR IN
Input connectors for the playback signal of a 2-Track tape machine.This signal is monitored through the STUDIO and CONTROL ROOM outputs.

(6) PB IN 1-8/9-16/17-24
Input connector for the playback signal of a 24-track tape machine. Each of the three connectors accommodates eight channels.
Signals input to these connectors are sent to the Master L/R and Send L/R via the Tape Monitor modules WU-8112 in the GROUP 1-4 and SEND L/R positions. Each WU-8112 module controls four channels, so if any Basic Group modules WU-8117 are used, or if a position has no module installed, the four Playback Input signals corresponding to each of those positions will not function. The Tape position of the Mono Input selector switch also will not function.

Examples:
If a Basic Group module is in Group 1 position, or if no module is in the Group 1 position, channels 1 to 4 of the PB IN connector and the Tape position of Mono Inputs 1 to 4 will not function.
If a Basic Group module is in Group 2 position, or if no module is in the Group 2 position, channels 5 to 8 of the PB IN connector and the Tape position of Mono Inputs 5 to 8 will not funciton.
If a Basic Group module is in Group 3 position, or if no module is in the Group 3 position, channels 9 to 12 of the PB IN connector and the Tape position of Mono Inputs 9 to 12 will not function, etc.

(7) REC OUT
Connectors for sending recording signals to a 24-channel multi-track tape recorder. The REC OUT signals are derived from the Groups 1-4 outputs when Tape Monitor or Basic Group modules are installed in those positions. The Group signals are sent to the REC OUT connectors via the Multi-Out switches on the right-hand side of the mainframe.
NOTE:
A GROUP OUTPUT MODULE (WU-8112/8117) MUST BE IN PLACE IN ORDER FOR THE ASSOCIATED OUTPUTS TO FUNCTION.

(8) AUX-IN/OUT CONNECTOR FOR SURROUND MODULE

(9) REMOTE CONNECTOR
Connector for accessing momentary switches on mainframe control panel. Can be used for Start/Stop function of turntables, cart machines, etc. See the section on Remote Switches for operating instructions and wiring diagram.

(10) GROUP OUT
Output connectors for the Group 1 to 4 busses.

(11) GROUP INSERTION
A pre-group fader patch point for the connection of signal processing, such as compressor, limiter, equalizer, etc., to the Group outputs.
A TRS 1/4-inch phone plug is used, wired as:

TIP:	Return
RING:	Send
SLEEVE:	Ground

(12) GROUP RETURN IN
A direct input to the Group module. These are useful when connecting the output of a 4-track tape machine, or another mixer. The signal level mixed with the Group out signal is adjusted by the module's Return control.

(13) SEND OUT
Output connectors for the SEND Left and SEND Right busses. Used for monitoring or as effect sends.

(14) SEND INSERTION
A pre-send fader patch point for the connection of signal processing, such as compressor, limiter, equalizer, etc., to the Send Outputs.
A TRS 1/4-inch phone plug is used, wired as:

TIP:	Return
RING:	Send
SLEEVE:	Ground

(15) SEND RETURN IN
A direct input to the Send module. These are useful when connecting additional line level inputs, or another mixer. The signal level mixed with the Send out signal is adjusted by the module's Return control.

(16) MASTER L/R OUT
Master stereo outputs. Use for stereo mastering, or in any situation in which stereo outputs are required.

(17) MASTER L/R SUB INPUTS
Direct inputs to the L and R Master signal busses. Used to connect another mixer, or additional line level inputs.

(18) EFFECT IN
Connector for output signals from effects devices, such as delay, reverb, etc. Can be used as a line input channel.

(19) MATRIX OUT
Output connectors for the Matrix modules.

(20) MATRIX INSERTION
A pre-Matrix fader patch point for the connection of signal processing, such as compressor, limiter, equalizer, etc., to the Matrix Outputs.
A TRS 1/4-inch phone plug is used, wired as:

TIP:	Return
RING:	Send
SLEEVE:	Ground

(21) EFFECT OUT
Output connectors for the Effect L/R busses. Used to connect signals to the input of effect devices.

(22) MONO OUT
Output connector for the Mono Output, derived by mixing the L and R Master outputs.
NOTE:
THE MONO OUTPUT, ALONG WITH ALL OTHER OUTPUTS, IS ELECTRONICALLY BALANCED. WHEN CONNECTING TO A TELEPHONE LINE, USE AN EXTERNAL ISOLATION TRANSFORMER.

(23) CONTROL ROOM OUT
Output connectors for the control room signal. Use these to connect the signal to the amplifier which is driving the control room monitor speakers.

(24) OSC OUT
An output jack for the internal test oscillator and talkback signal.

(25) STUDIO OUT
Output connectors for sending a monitor signal into the studio.

(26) STUDIO MUTE SWITCH
Turning this switch on enables the studio mute function, which causes the Studio Outputs to be muted when the CHANNEL ON Switch of a mono input channel in positions 1 to 4 is depressed.

(27) GND
An external chassis ground terminal.

(28) POWER SOURCE
Connector for the power cable from the WU-8085 external power supply.

(29) BLANK PANEL
For additional AUX connector.

REMOTE CONTROL SWITCHES

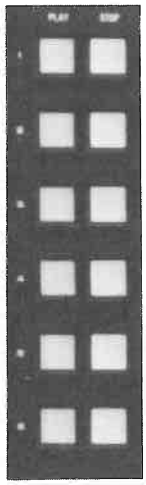

Monentary-contact switches for the remote control fo turntables, tape machines, cart machines, etc. A total of 12 switches are arranged into 6 Start/Stop pairs.
The switch contacts are accessible by the rear panel remote multi-pin connector. Refer to the chart for pinout.
A multi-pin plug is included with the mainframe. When wiring this connector, be sure to refer to the operating manual for the equipment being connected for proper operation.
Switch contact capacity is 24 volts, 50 mA maximum.
These switches are momentary-make, non-locking type. When connecting to equipment that requires locking switches, a relay interface will be necessary.

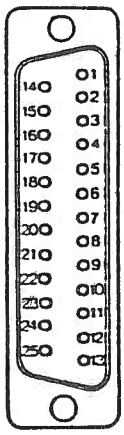

D SUB CONNECTOR

Pin No.	Mode	Pin No.	Mode
1	PLAY1	14	STOP1
2		15	
3	PLAY2	16	STOP2
4		17	
5	PLAY3	18	STOP3
6		19	
7	PLAY4	20	STOP4
8		21	
9	PLAY5	22	STOP5
10		23	
11	PLAY6	24	STOP6
12		25	
13			

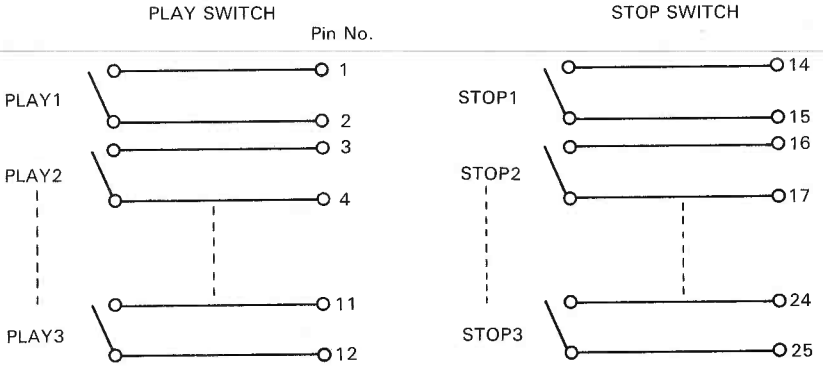

REC OUTPUT SWITCHES

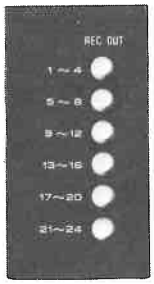

These switches assign the Group 1 to 4 output signals to REC OUT multi-pin connector terminals 1-4/5-8/9-12/13-16/17-20/21-24. This eliminates the need for repatching when sending output signals to various channels of a multi-track tape machine.

NOTE:
For more detailed drawing of REC OUT switch circuit, refer to the Block Diagram.

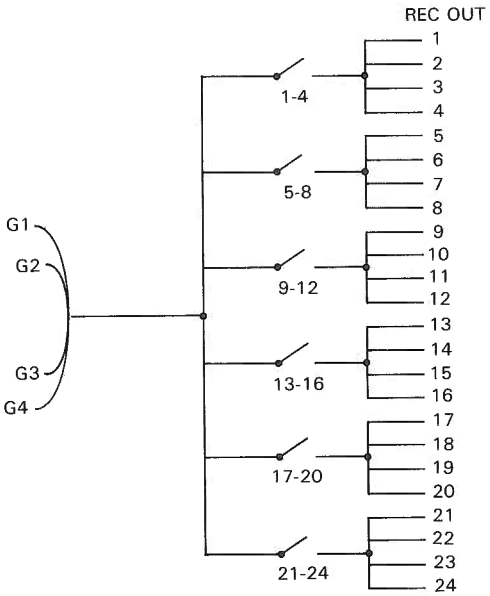

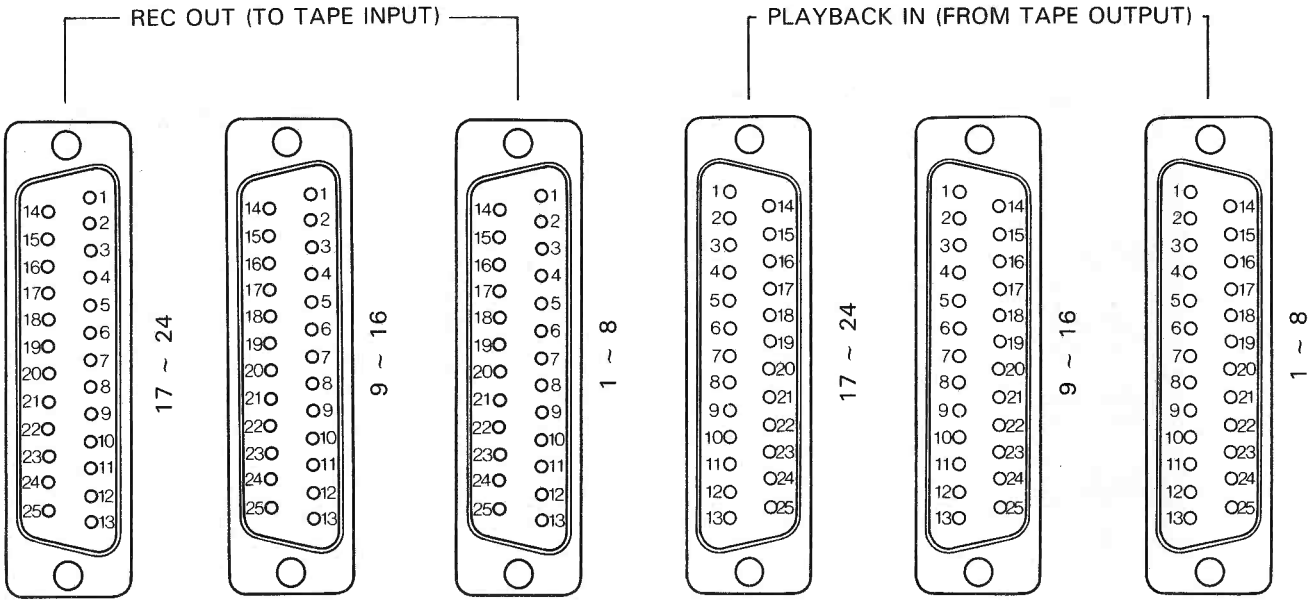

REC OUT CONNECTOR			
Pin No.	COLOR	Ch No.	
1		1, 9, 17	Hot
2			GND
14			GND
4		2, 10, 18	Hot
5			GND
17			GND
7		3, 11, 19	Hot
8			GND
20			GND
10		4, 12, 20	Hot
11			GND
23			GND
15		5, 13, 21	Hot
16			GND
3			GND
18		6, 14, 22	Hot
19			GND
6			GND
21		7, 15, 23	Hot
22			GND
9			GND
24		8, 16, 24	Hot
25			GND
12			GND

PLAYBACK IN CONNECTOR			
Pin No.	COLOR	Ch No.	
1		1, 9, 17	Hot
2			Cold
14			GND
4		2, 10, 18	Hot
5			Cold
17			GND
7		3, 11, 19	Hot
8			Cold
20			GND
10		4, 12, 20	Hot
11			Cold
23			GND
15		5, 13, 21	Hot
16			Cold
3			GND
18		6, 14, 22	Hot
19			Cold
6			GND
21		7, 15, 23	Hot
22			Cold
9			GND
24		8, 16, 24	Hot
25			Cold
12			GND

CABLE CONNECTIONS TO IN/OUT CONNECTOR

- **XLR Connectors**

a. Balanced Connection (Input)
Connect 2-conductor shielded cable as shown below.

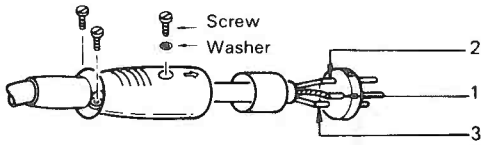

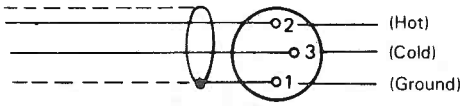

3-pin XLR
male connector

b. Balanced Connection (Output)
Connect 2-conductor shielded cable as shown below.

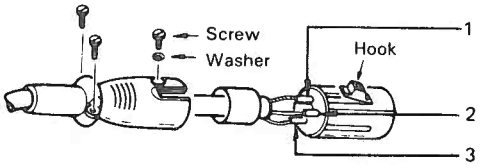

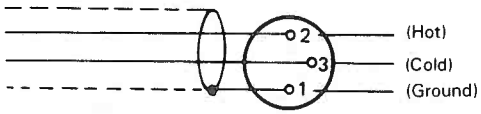

3-pin XLR
female connector

c. Unbalanced Connection (Input and Output)
When using an unbalanced microphone, connect pin No.2 (Hot) and No.3, 1 (Ground).

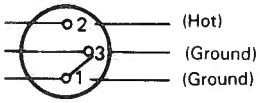

d. Balanced Connection (Input and Output)

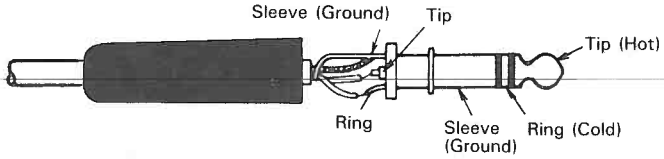

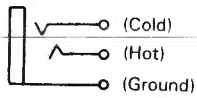

Tip-sleeve phone plug (OSC output, unbalanced connection)
Connect single-conductor shielded cable as shown below.

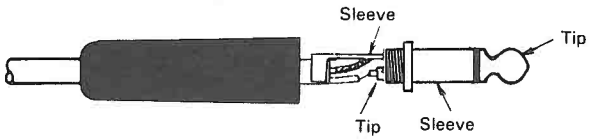

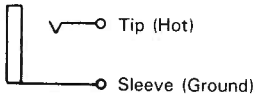

Tip-sleeve phone jack

Tip-ring-sleeve phone plug (INSERTION IN/OUT)
Connect 2-conductor shielded cable as shown below.

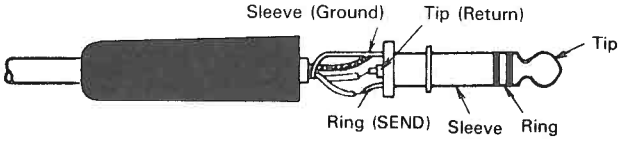

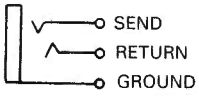

Tip-ring-sleeve phone jack

Headphone

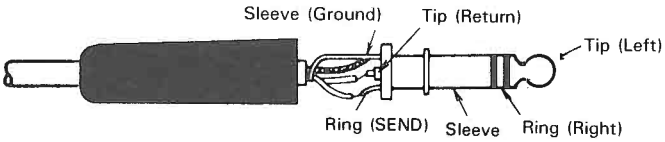

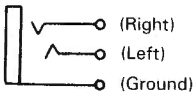

Headphone jack

25-pin D-sub connector (PBIN, RECOUT, REMOTE, AUX)

Use male plug for: PB IN, AUX
Use female plug for: REC OUT, REMOTE

LEVEL DIAGRAM

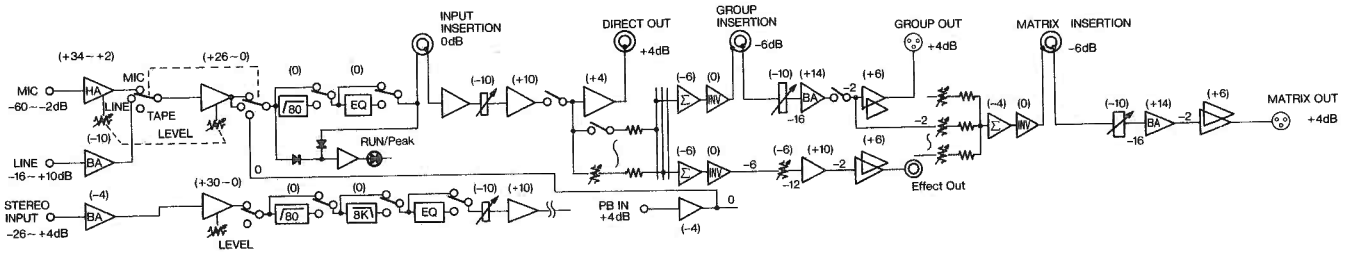

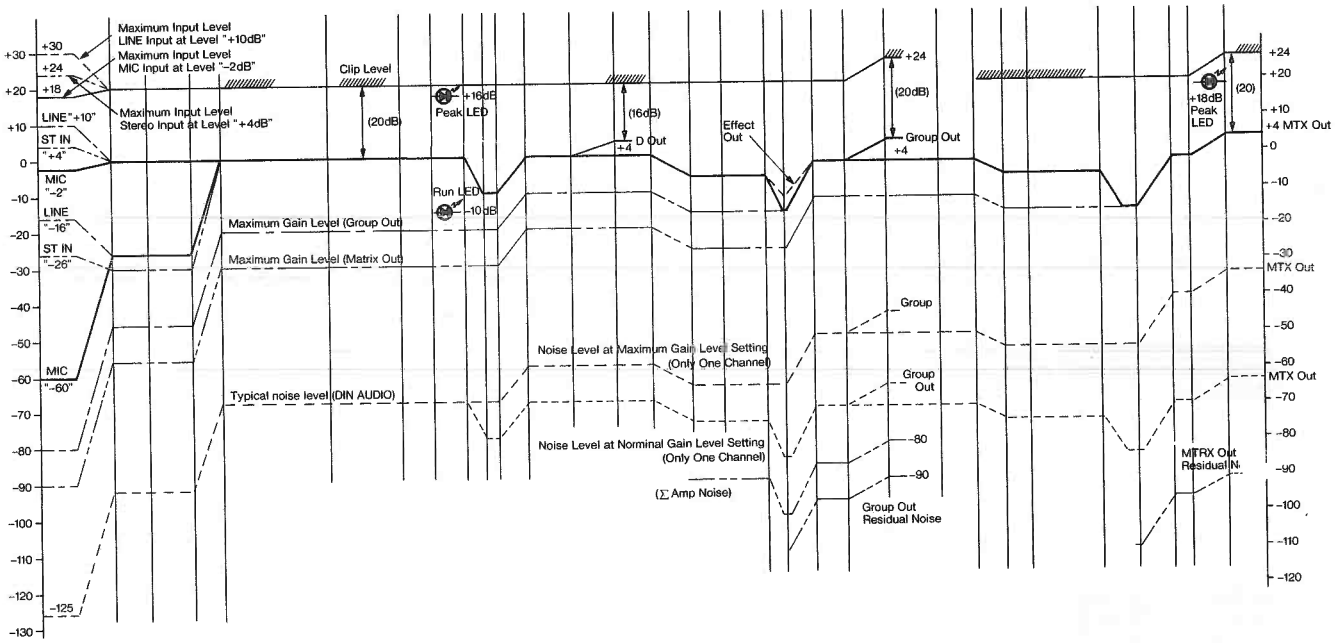

BLOCK DIAGRAM

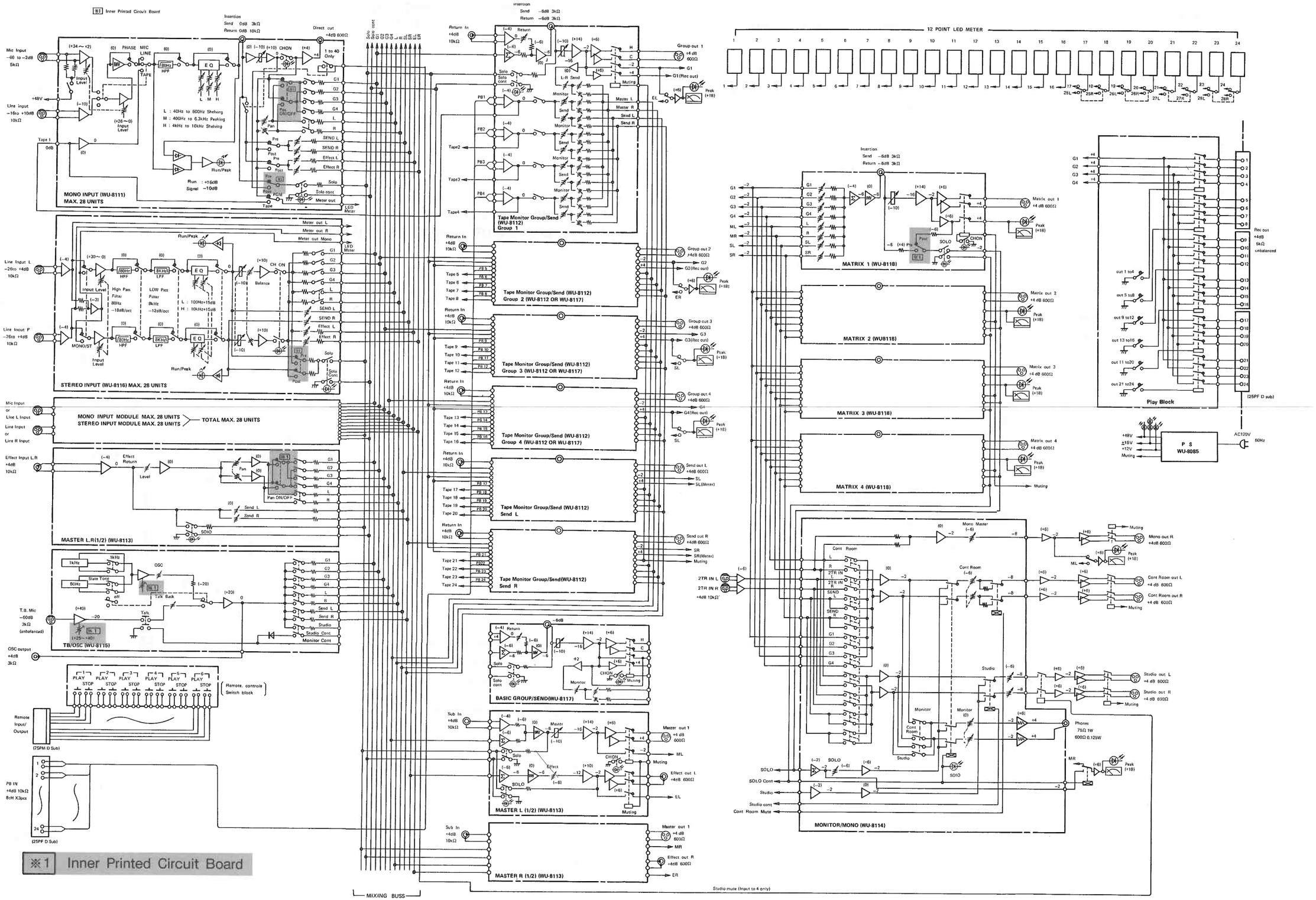

OPERATION CHECK

Instructions for the Following Operation Checks

- Input and output levels are referenced to as 0 dB = 0.775 V rms. And the measurement of microphone input level is made without applying a 600 ohm termination at the output of the oscillator. For the other input circuits, the measurement is made applying a 600 ohm termination at the output of the oscillator.
- Set the solo switches (WU-8111, WU-8112, WU-8113) and Pan On/Off Switch (WU-8111 only) on the circuit board to off position unless otherwise specified.
- Set the controls on the Mono Input Module (WU-8111) as shown in Table 1 unless otherwise specified.

* For Items No. 1 to 5 and 17.19.

Table 1

Mono Input Module (WU-8111)	
CONTROLS	SETTING
Input Level Switch	MIC or LINE
Input Level Control	At [−60] or −16 on scale
High Pass Filter Switch	At off position
Equalizer On Switch	At off position
Input Fader	At "0" on scale
Channel On Switch	At on position

- Apply a −60 dB (± 4 dB)/1 kHz signal to the MIC INPUT 1 connector, and check that the Run LED on the Mono Input Module is lit.
- Apply a −44 dB (± 2 dB)/1 kHz signal to the MIC INPUT 1 connector, and check that the Peak LED on the Mono Input Module is lit.
- Apply a −60 dB (± 1 dB)/1 kHz signal to the MIC INPUT 1 connector.
- Apply a −16 dB (± 1 dB)/1 kHz signal to the LINE INPUT 1 connector.

1. MIC INPUT → GROUP OUTPUT
LINE INPUT → GROUP OUTPUT

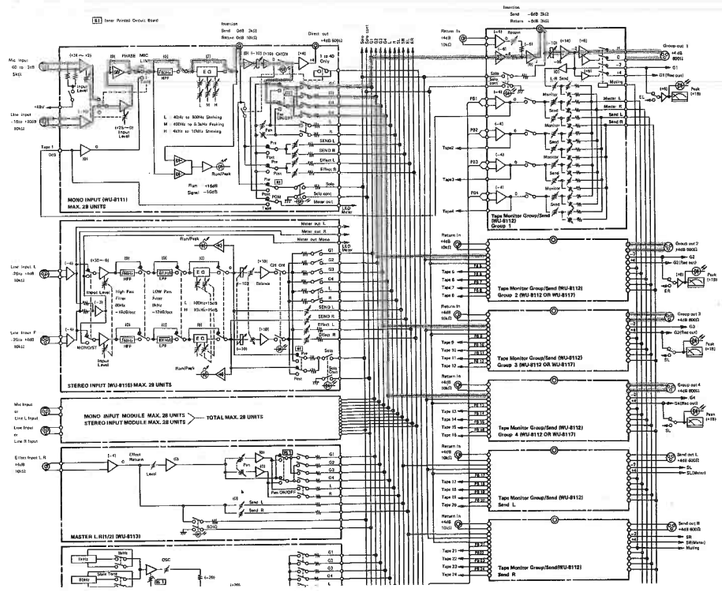

- Set the controls on the Mono Input Module (WU-8111), Tape Monitor Group/Send Module (WU-8112), Basic Group/Send Module (WU-8117) as follows.

■ **Mono Input Module (WU-8111)**

- **Set the controls as shown in Table 1.**

Program Bus Assign
Switches [1] to [4] : At on position

■ **Tape Monitor Group/Send Module (WU-8112)**

Group Fader : At "0" on scale

■ **Basic Group/Send Module (WU-8117)**

Group Fader : At "0" on scale
Channel On Switch : At on position

- Check that the output levels at GROUP 1 to GROUP 4 are +4dB with a 600 ohm load.
- Check all the MIC INPUTs and LINE INPUTs in the same way.

2. MIC INPUT → DIRECT OUT
LINE INPUT → DIRECT OUT

- Set the controls on the Mono Input Module (WU-8111) as shown in Table 1.
- Check that the output level at DIRECT OUTPUT is +4 dB with a 600 ohm load.
- Check all the MIC INPUTs and LINE INPUTs in the same way.

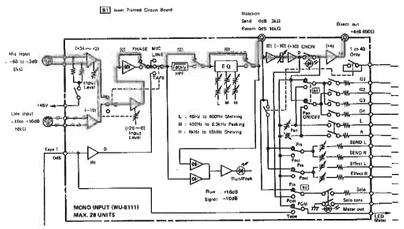

3. MIC INPUT → MASTER L, R OUTPUT
LINE INPUT → MASTER L, R OUTPUT

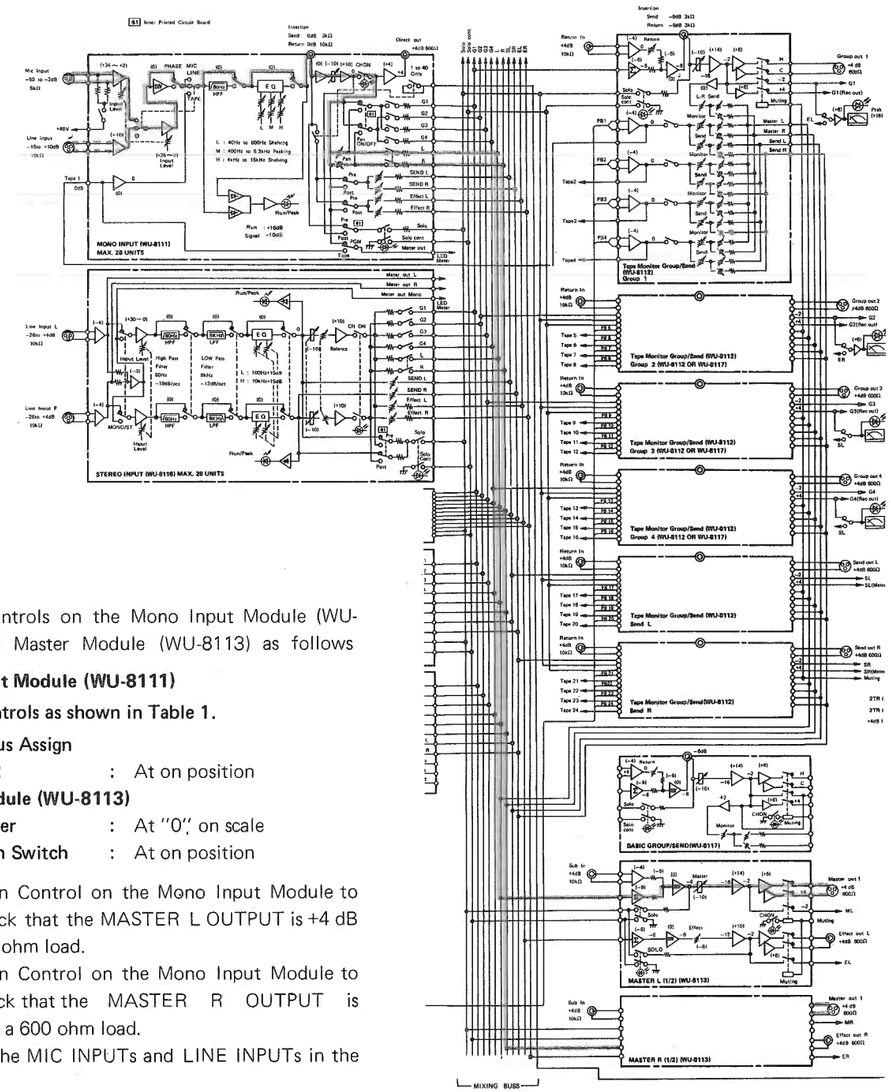

- Set the controls on the Mono Input Module (WU-8111) and Master Module (WU-8113) as follows

■ **Mono Input Module (WU-8111)**

- **Set the controls as shown in Table 1.**

Program Bus Assign
Switch L-R : At on position

■ **Master Module (WU-8113)**

Master Fader : At "0" on scale
Channel On Switch : At on position

- Set the Pan Control on the Mono Input Module to L, and check that the MASTER L OUTPUT is +4 dB with a 600 ohm load.
- Set the Pan Control on the Mono Input Module to R, and check that the MASTER R OUTPUT is +4 dB with a 600 ohm load.
- Check all the MIC INPUTs and LINE INPUTs in the same way.

4. MIC INPUT ⟶ EFFECT L, R OUTPUT
LINE INPUT ⟶ EFFECT L, R OUTPUT

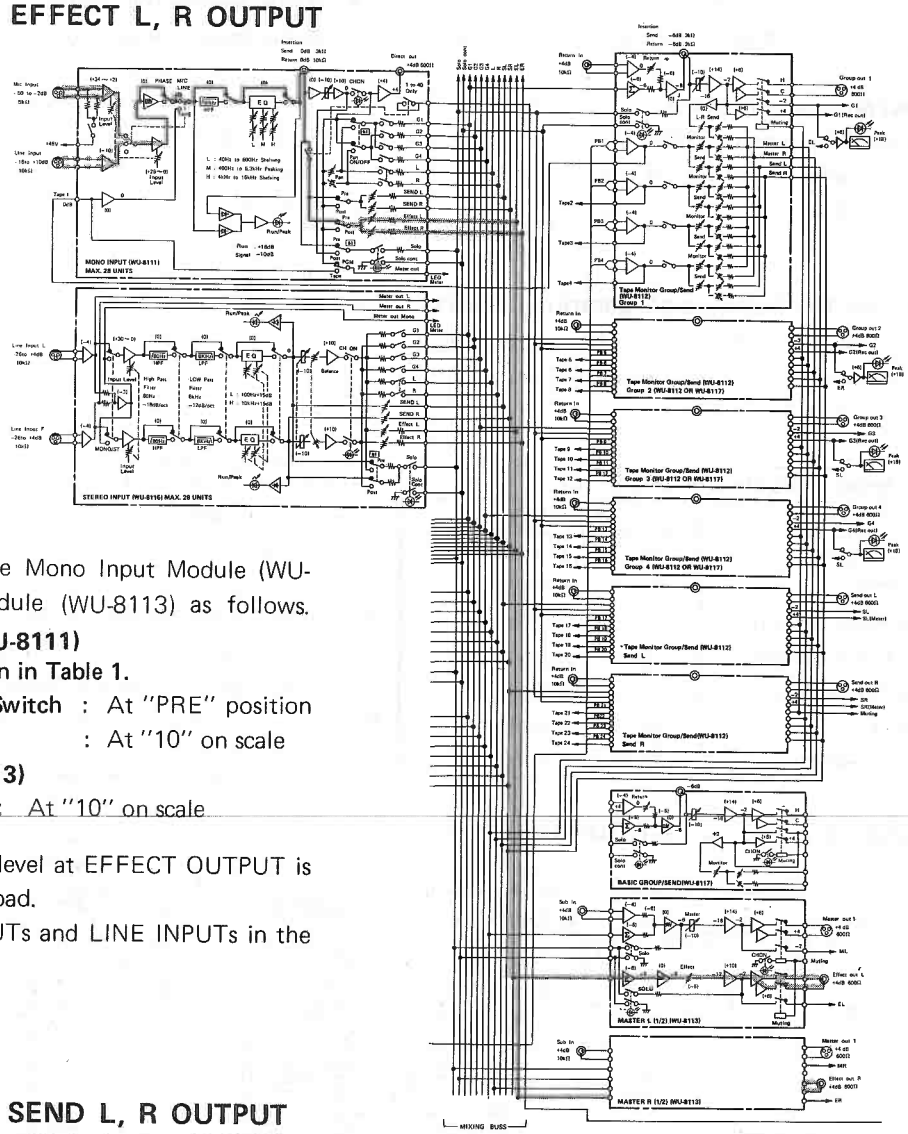

- Set the controls on the Mono Input Module (WU-8111) and Master Module (WU-8113) as follows.

■ **Mono Input Module (WU-8111)**

- **Set the controls as shown in Table 1.**

Effect Pre/Post Select Switch	:	At "PRE" position
Effect L, R Control	:	At "10" on scale

■ **Master Module (WU-8113)**

Master Effect Control	:	At "10" on scale

- Check that the output level at EFFECT OUTPUT is +4 dB with a 600 ohm load.
- Check all the MIC INPUTs and LINE INPUTs in the same way.

5. MIC INPUT ⟶ SEND L, R OUTPUT
LINE INPUT ⟶ SEND L, R OUTPUT

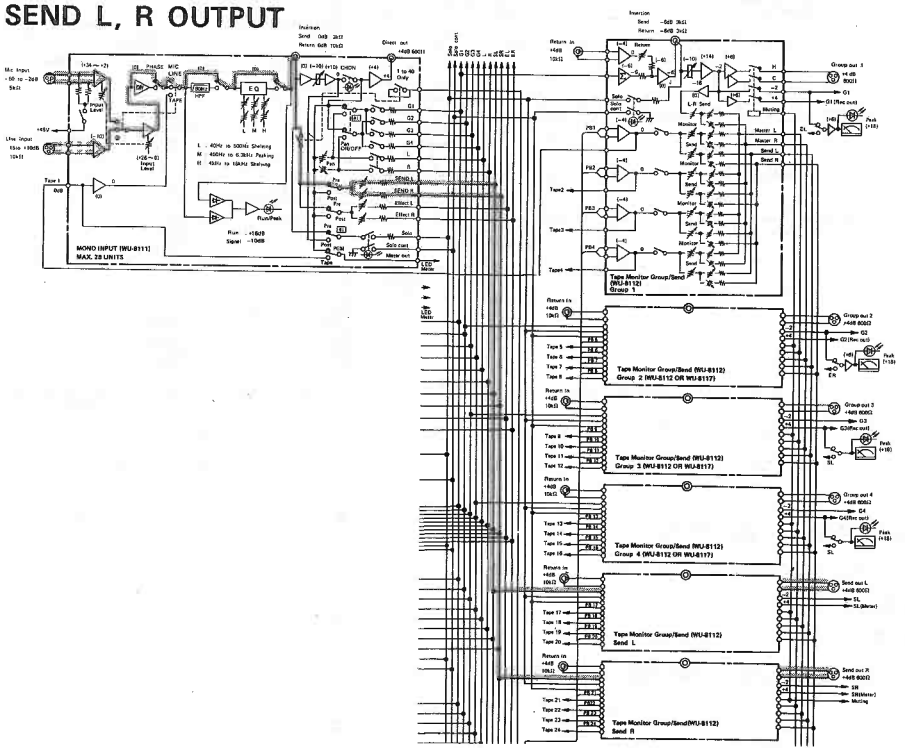

- Set the controls on the Mono Input Module (WU-8111) and Master Module (WU-8113) as follows.

■ **Mono Input Module (WU-8111)**

- **Set the controls as shown in Table 1.**

Send Pre/Post Select Switch : At "PRE" position
Send L, R Control : At "10" on scale

■ **Master Module (WU-8113)**

Master Send L, R Control : At "10" on scale

- Check that the output level at SEND OUTPUT is +4 dB with a 600 ohm load.
- Check all the MIC INPUTs and LINE INPUTs in the same way.

Instructions for the Following Operation Checks.

- Set the controls on the Stereo Input Module (WU-8116) as shown in Table 2 unless otherwise specified.

* For Items No. 6 to 9 and 17.18.

Table 2

Stereo Input Module (WU-8116)	
CONTROLS	SETTING
Mono/ST Switch	At "ST" position
Level Control	At "0" on scale
High Pass Filter Switch	At off position
Low Pass Filter Switch	At off position
Equalizer On Switch	At off position
Input Fader	At "0" on scale
Channel On Switch	At on position

- Apply a −26 dB (± 4 dB)/1 kHz signal to the LINE INPUT 1.L and LINE INPUT 1.R connectors and check that the RUN LED on the stereo Input Module is lit.
- Apply a −10 dB (±2 dB)/1 kHz signal to the LINE INPUT 1.L and LINE INPUT 1.R connectors and check that the Peak LED on the Stereo Input Module is lit.
- Apply a −26 dB (± 1 dB)/1 kHz signal to the LINE INPUT 1.L and LINE INPUT 1.R connectors.

6. LINE INPUT L, R → GROUP OUTPUT

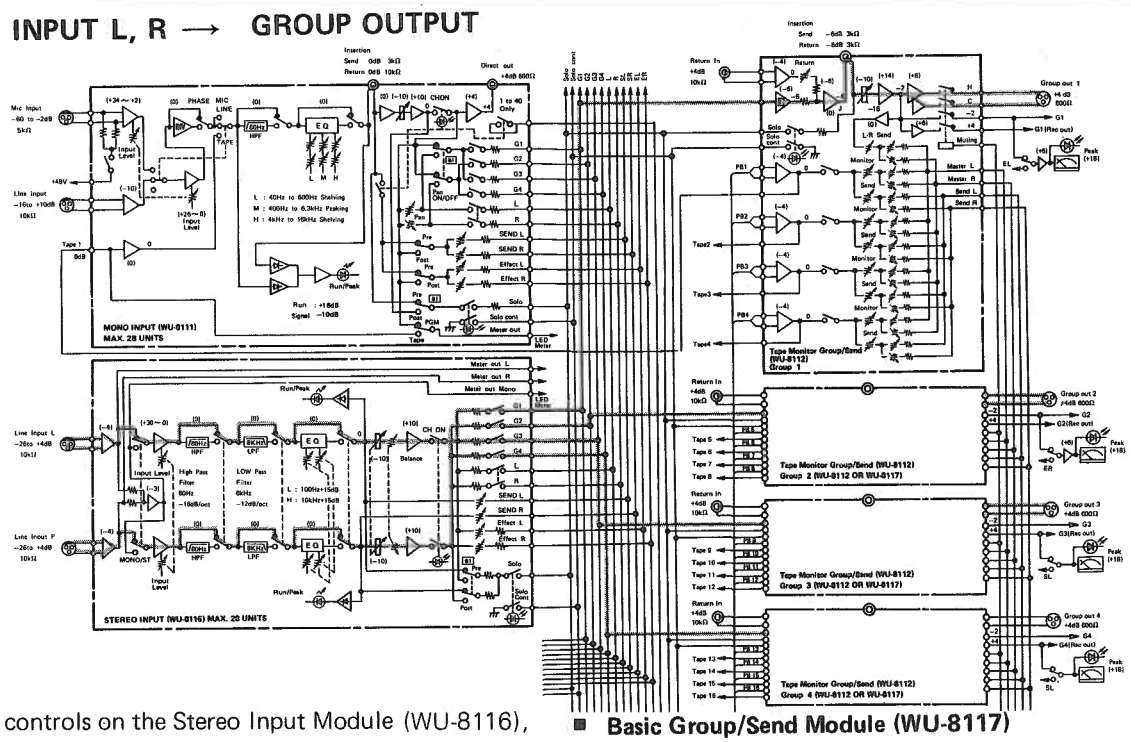

- Set the controls on the Stereo Input Module (WU-8116), Tape Monitor Group/Send Module (WU-8112), and Basic Group/Send Module (WU-8117) as follows.

■ **Stereo Input Module (WU-8116)**

- **Set the controls as shown in Table 2.**

Program Bus Assign
Switches 1 to 4 : At on position

■ **Tape Monitor Group/Send Module (WU-8112)**

Group Fader : At "0" on scale

■ **Basic Group/Send Module (WU-8117)**

Group Fader : At "0" on scale
Channel On Switch : At on position

- Set the Balance Control on the Stereo Input Module to 1.3.L, and check that the output levels at GROUP 1 and GROUP 3 OUTPUTs are +4 dB with a 600 ohm load.
- Set the Balance Control on the Stereo Input Module to 2.4.R, and check that the output levels at GROUP 2 and GROUP 4 OUTPUTs are +4 dB with a 600 ohm load.
- Check all the LINE INPUTs L, R in the same way.

7. LINE INPUT L, R ⟶ MASTER L, R OUTPUT

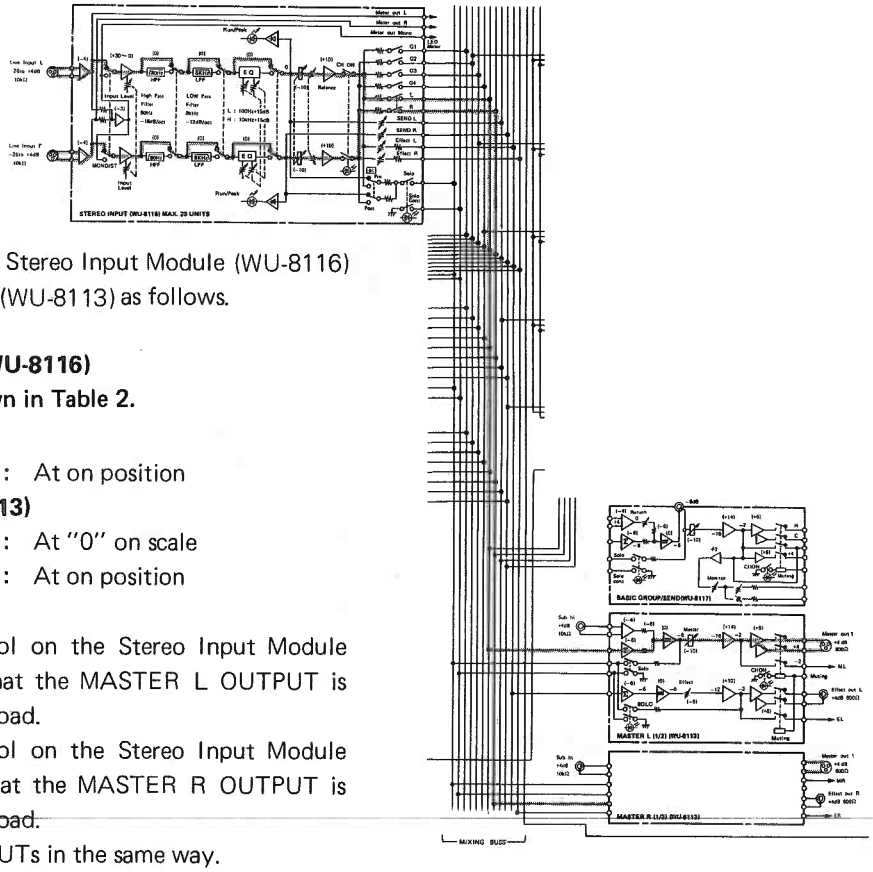

- Set the controls on the Stereo Input Module (WU-8116) and the Master Module (WU-8113) as follows.

■ **Stereo Input Module (WU-8116)**

- **Set the controls as shown in Table 2.**

Program Bus Assign

Switch L-R : At on position

■ **Master Module (WU-8113)**

Master Fader : At "0" on scale

Channel On Switch : At on position

- Set the Balance Control on the Stereo Input Module to 1.3.L,. and check that the MASTER L OUTPUT is +4 dB with a 600 ohm load.
- Set the Balance Control on the Stereo Input Module to 2.4.R, and check that the MASTER R OUTPUT is +4 dB with a 600 ohm load.
- Check all the LINE INPUTs in the same way.

8. LINE INPUT L, R ⟶ EFFECT L, R OUTPUT

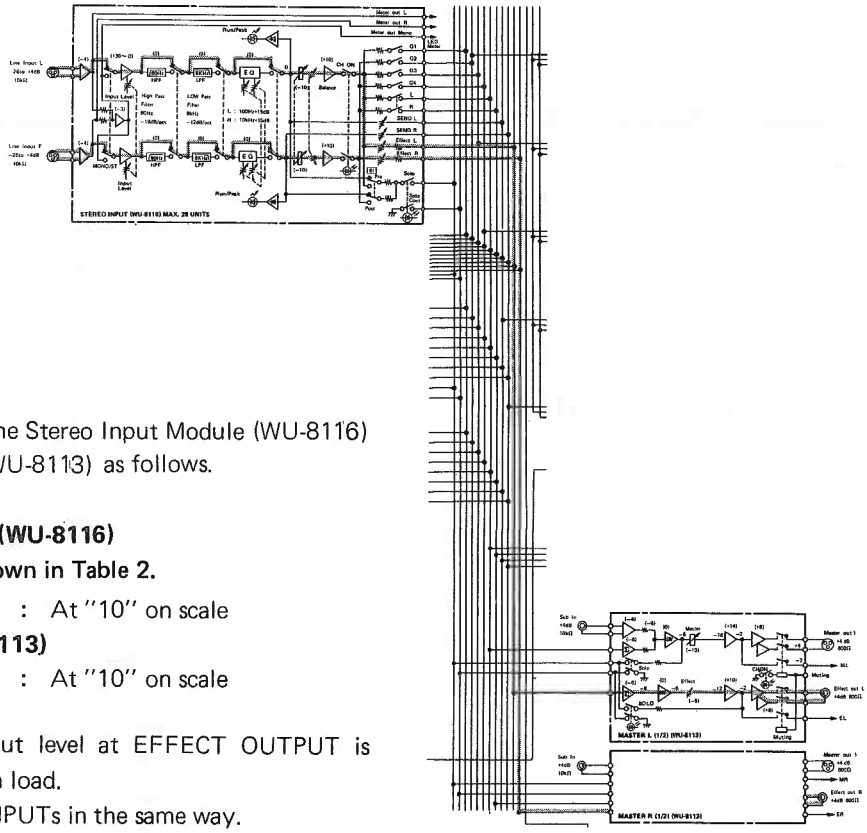

- Set the controls on the Stereo Input Module (WU-8116) and Master Module (WU-8113) as follows.

■ **Stereo Input Module (WU-8116)**

- **Set the controls as shown in Table 2.**

Effect L-R Control : At "10" on scale

■ **Master Module (WU-8113)**

Master Effect Control : At "10" on scale

- Check that the output level at EFFECT OUTPUT is +4 dB with a 600 ohm load.
- Check all the LINE INPUTs in the same way.

9. LINE INPUT L, R ⟶ SEND L, R OUTPUT

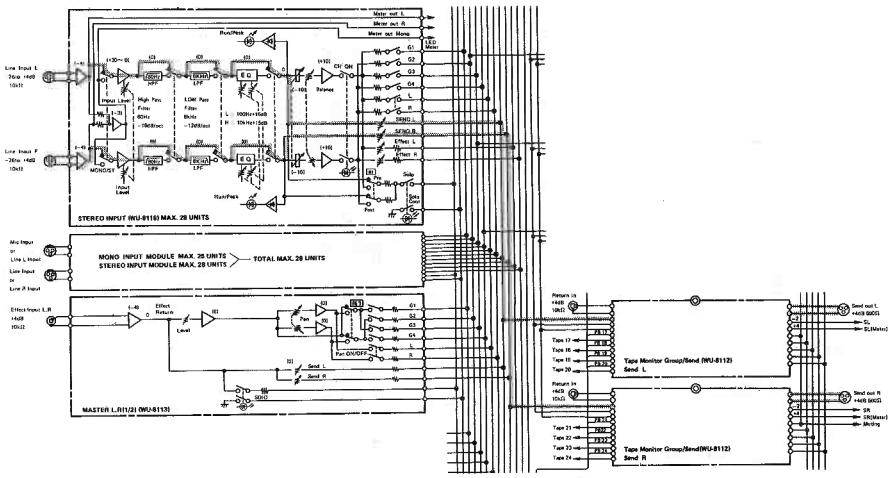

- Set the controls on the Stereo Input Module (WU-8116) and Tape Monitor Group/Send Module (WU-8112)as follows.

■ **Stereo Input Module (WU-8116)**

- **Set the controls as shown in Table 2.**

  Send L, R Control : At "10" on scale

■ **Tape Monitor Group/Send Module (WU-8112)**

- Set the Controls as shown in Table 3.

  Program Bus Assign

  Switch L-R : At on position

- Check that the output levels at SEND OUTPUT is +4 dB with a 600 ohm load.
- Check all the LINE INPUTs in the same way.

Instructions for the Following Operation Checks

- Set the controls on the Tape Monitor Group/send Module (WU-8112) as shown in Table 3 unless otherwise specified.

* For Items No. 10 and 11.

- Set the controls on the Basic Group/Send Module (WU-8117) as shown in Table 4 unless otherwise specified.

* For Items No. 10 and 11.

Table 3

Tape Monitor Group/Send Module (WU-8112)	
CONTROLS	SETTING
Group Fader	At "0" on scale
● Apply a +4 dB (± 1 dB)/1 kHz signal to the Group 1 RETURN INPUT Jack.	

Table 4

Basic Group/Send Module (WU–8117)	
CONTROLS	SETTING
Group Fader	At "0" on scale
Channel On Switch	At on position
● Apply a +4 dB (± 1 dB)/1 kHz signal to the Group 1 RETURN INPUT Jack.	

10. RETURN IN ⟶ GROUP OUTPUT

- Set the controls on the Tape Monitor Group/Send Module (WU-8112) and Basic Group/Send Module (WU-8117) as shown in Table 3 and Table 4.
- Check that the output level at GROUP 1 OUTPUT is +4 dB with a 600 ohm load.
- By increasing the input level, check that the Peak LED on the VU Meter is turned on when the GROUP 1 OUTPUT is +18 dB (± 2 dB) with a 600 ohm load.
- Check all the GROUP RETURN IN in the same way.

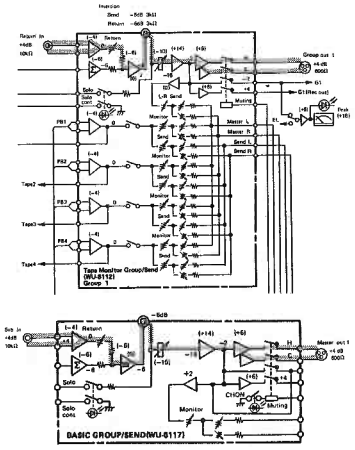

11. RETURN IN ⟶ MONO OUTPUT
RETURN IN ⟶ CONT RM L, R OUTPUT
RETURN IN ⟶ STUDIO L, R OUTPUT

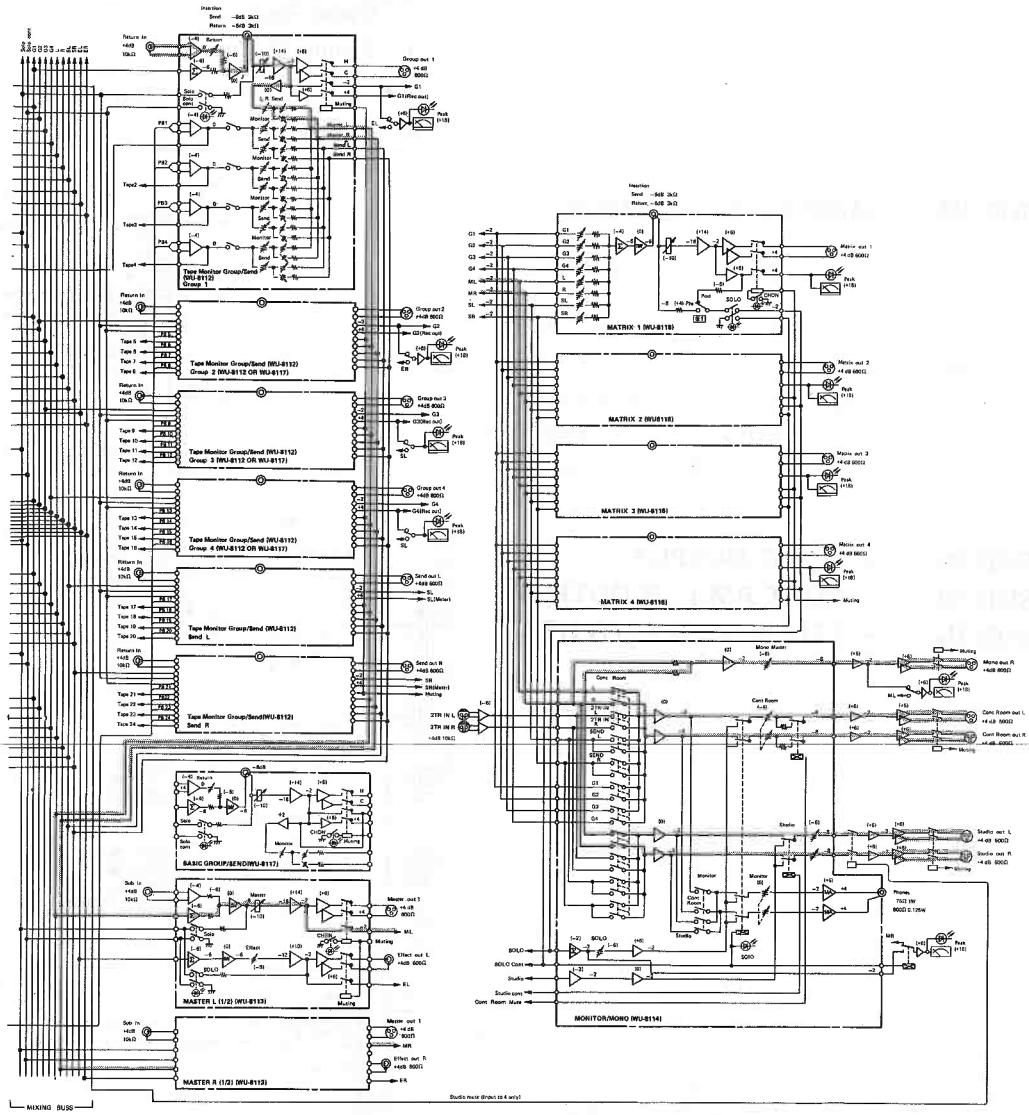

- Set the controls on the Tape Monitor Group/Send Module (WU-8112), Master Module (WU-8113) and Monitor/Mono Module (WU-8114) as follows.

■ **Tape Monitor Group/Send Module (WU-8112)**

- **Set the controls as shown in Table 3.**

LR Send Control	:	At "10" on scale

■ **Master Module (WU-8113)**

Master Fader	:	At "0" on scale
Channel On Switch	:	At on position

■ **Monitor/Mono Module (WU-8114)**

Mono Master Control	:	At "10" on scale
Cont Room Out Switch L, R	:	At on position
Cont Room Volume Control	:	At "10" on scale
Studio Control	:	At "10" on scale
Studio Select Switch L, R	:	At on position

- Set the LR Send Pan Control on the Tape Monitor Group/Send Module to L, and check that the output level at CONT RM L OUTPUT, MONO OUTPUT and STUDIO L OUTPUT are +4 dB with a 600 ohm load.
- Set the LR Send Pan Control on the Tape Monitor Group/Send Module to R, and check that the output levels at CONT RM R OUTPUT, MONO OUTPUT and STUDIO R OUTPUT are +4 dB with a 600 ohm load.
- Check all the GROUP RETURN INPUTs in the same way.

Instructions for the Following Operation Checks.

- Set the controls on the Master Module (WU-8113) as shown in Table 5 unless otherwise specified.
  - * For Items No. 12 and 13.

Table 5

Master Module (WU-8113)	
CONTROLS	SETTING
Master Fader	At "0" on scale
Channel On Switch	At on position
● Apply a +4 dB (± 1 dB)/1 kHz signal to the MASTER L SUB IN Jack.	

12. SUB IN ⟶ MASTER L, R OUTPUT

- Set the controls on the Master Module (WU-8113) as shown in Table 5.
- Check that the output level at MASTER L OUTPUT is +4 dB with a 600 ohm load.
- By increasing the input level, check that the Peak LED on the VU Meter is turned on when the MASTER L OUTPUT is +18dB (±2dB) with a 600 ohm load.

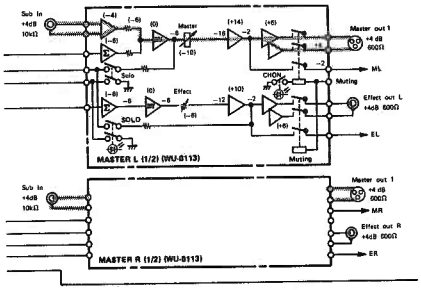

13. SUB IN ⟶ MONO OUTPUT
SUB IN ⟶ CONT RM L, R OUTPUT
SUB IN ⟶ STUDIO L, R OUTPUT

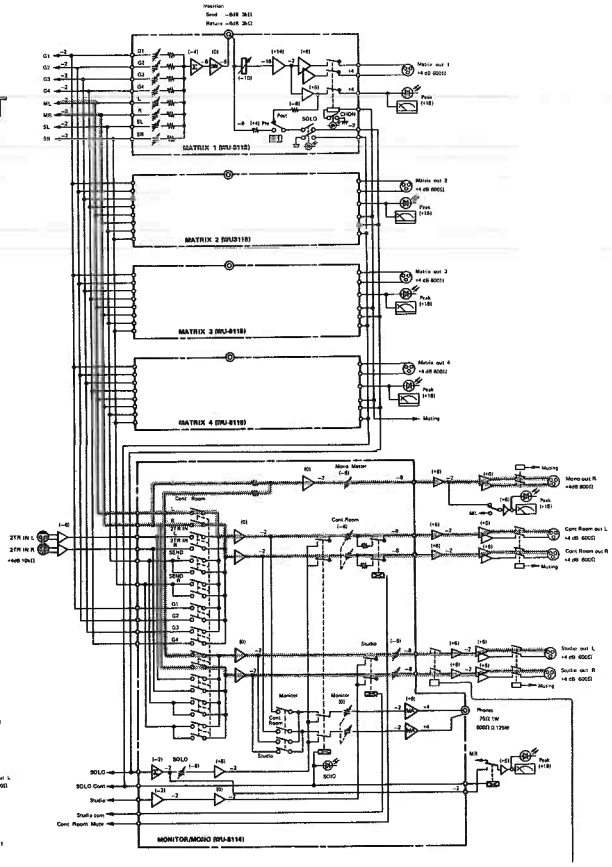

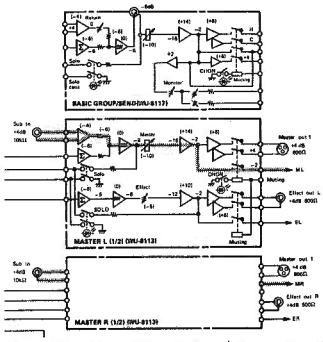

- Set the controls on the Master Module (WU-8113) as shown in Table 5 and Monitor/Mono Module (WU-8114) as follows.

■ **Monitor/Mono Module (WU-8114)**

Mono Master Control	:	At "10" on scale
Cont Room Out Switch L, R	:	At on position
Cont Room Volume Control	:	At "10" on scale
Studio Control	:	At "10" on scale
Studio Select Switch L, R	:	At on position

- Check that the output level at CONT RM L OUTPUT, MONO OUTPUT and STUDIO L OUTPUT are +4dB with a 600 ohm load.
- Check MASTER R SUB INPUT in the same way.

14. EFFECT IN ⟶ MONITOR GROUP OUTPUT

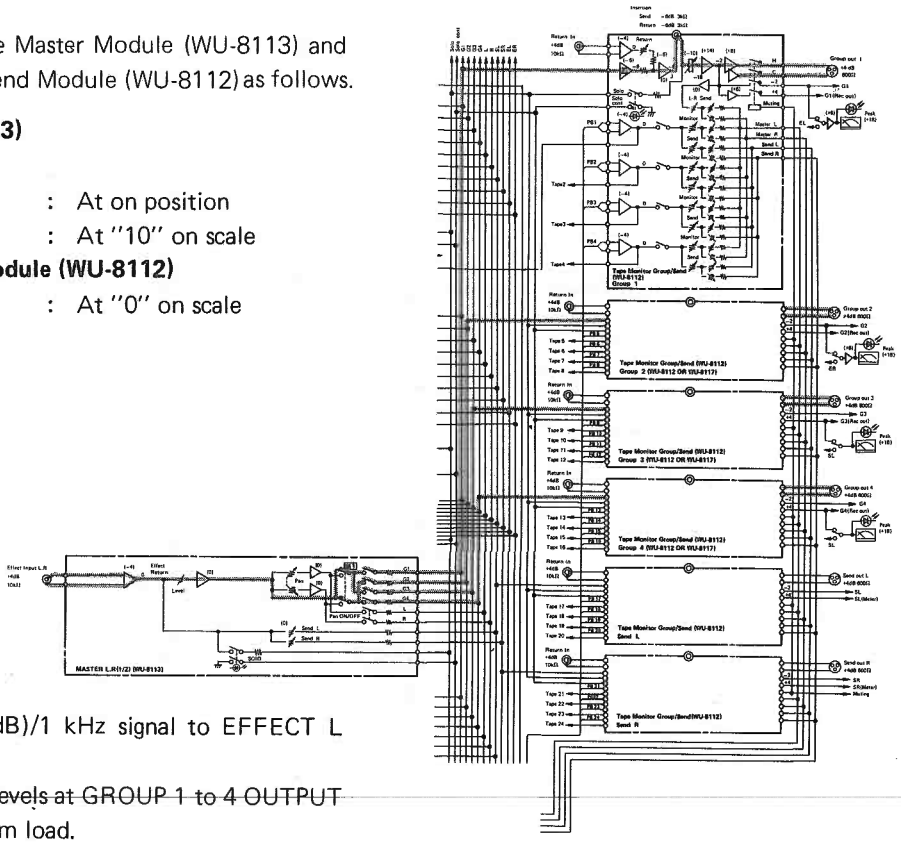

- Set the controls on the Master Module (WU-8113) and Tape Monitor Group/Send Module (WU-8112) as follows.

■ **Master Module (WU-8113)**

Effect Return Assign Switches 1 to 4	:	At on position
Effect Return Control	:	At "10" on scale

■ **Tape Monitor Group Module (WU-8112)**

Group Fader	:	At "0" on scale

- Apply a +4 dB (± 1 dB)/1 kHz signal to EFFECT L INPUT Jack.
- Check that the output levels at GROUP 1 to 4 OUTPUT are +4 dB with a 600 ohm load.
- Check EFFECT R INPUT in the same way.

15. EFFECT IN ⟶ MASTER L, R OUTPUT

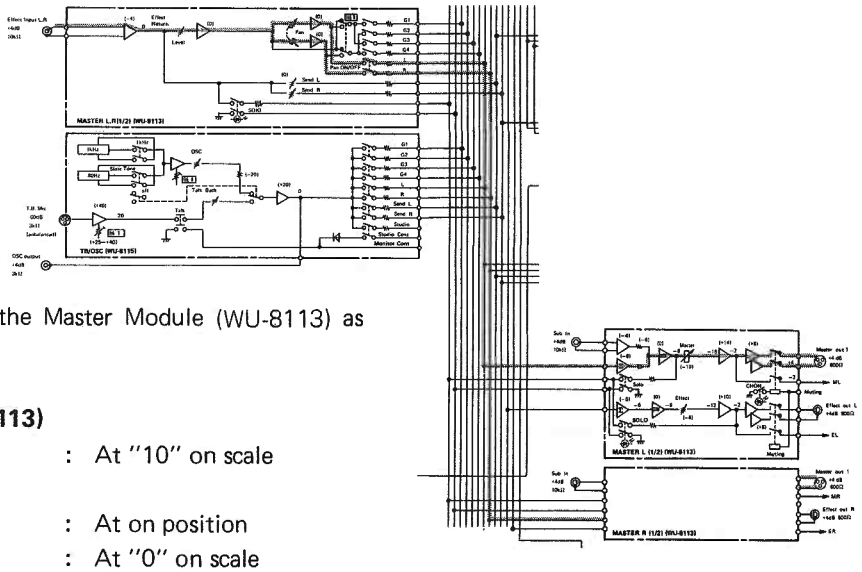

- Set the controls on the Master Module (WU-8113) as follows.

■ **Master Module (WU-8113)**

Effect Return Control	:	At "10" on scale
Effect Return Assign Switch L-R	:	At on position
Master Fader	:	At "0" on scale
Channel On Switch	:	At on position

- Apply a +4 dB (± 1 dB)/1 kHz signal to the EFFECT L INPUT Jack.
- Set the Pan Control on the Master Module to L, and check that the output level at MASTER L OUTPUT is +4 dB with a 600 ohm load.
- Set the Pan Control on the Master Module to R, and check that the output level at MASTER R OUTPUT is +4 dB with a 600 ohm load.
- Check EFFECT R INPUT in the same way.

16. TB IN, OSC

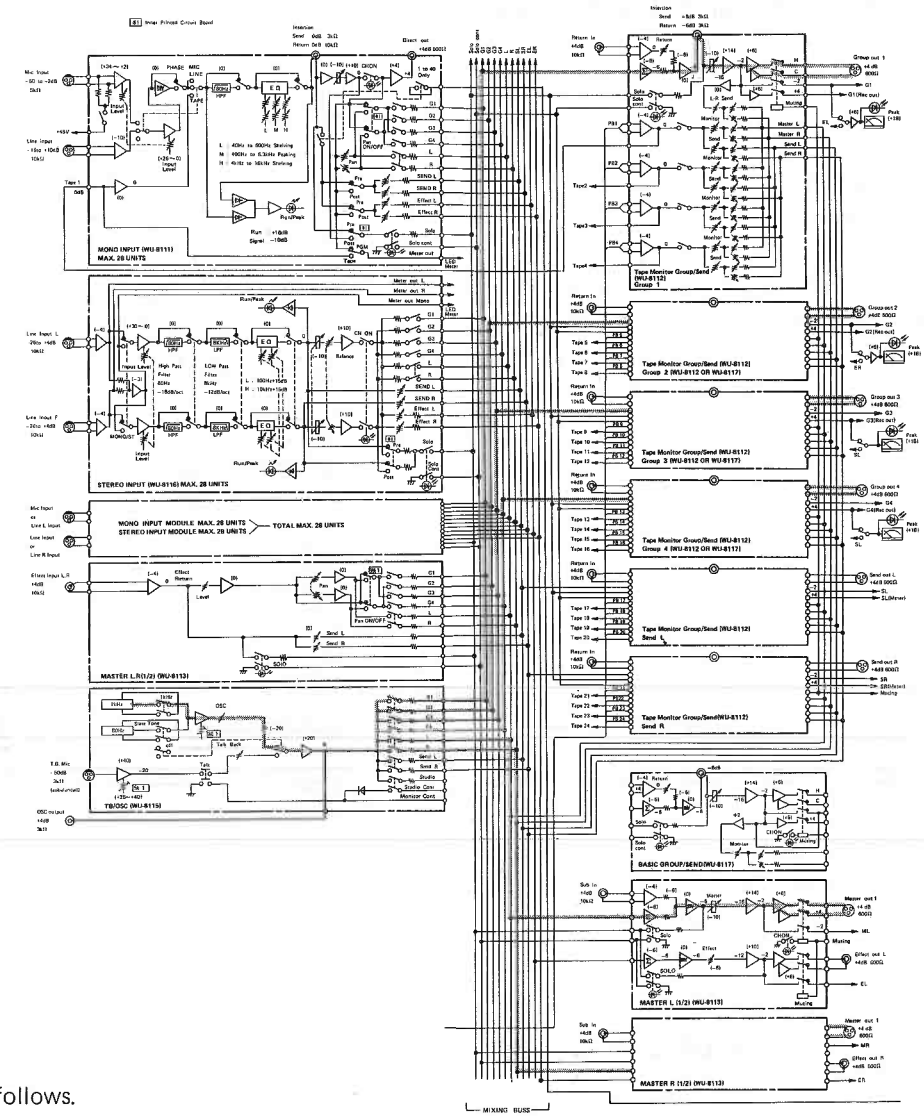

- Set the controls as follows.

■ **TB/OSC Module (WU-8115)**

OSC Select Switch	:	1 kHz
Oscillator Output Level Control	:	At "10" on scale
TB Mic Level Control	:	At "10" on scale
TB/OSC Assign Switch SEND L, SEND R, 1 2 , 3 4 , L-R	:	At on position
Talk Switch	:	At off position

■ **Tape Monitor Group/Send Module (WU-8112)**

Group Fader	:	At "0" on scale
LR Send Control	:	At "0" on scale

■ **Basic Group/Send Module (WU-8117)**

Group Fader	:	At "0" on scale
Channel On Switch	:	At on position
LR Send Control	:	At "0" on scale

■ **Master Module (WU-8113)**

Master Fader	:	At "0" on scale
Channel On Switch	:	At on position
Send L/R Control	:	At "10" on scale

- Check that the output level at GROUP 1 OUTPUT is +4 dB with a 600 ohm load.
- Check that the output level at OSC OUT is +4 dB with a 3 k ohm load.
- Check that the output OSC frequency is 1 kHz ± 100 Hz
- Check Group 2 to 4 OUTPUTs MASTER L, R OUTPUT and send L, R Output in the same way.

17. SOLO

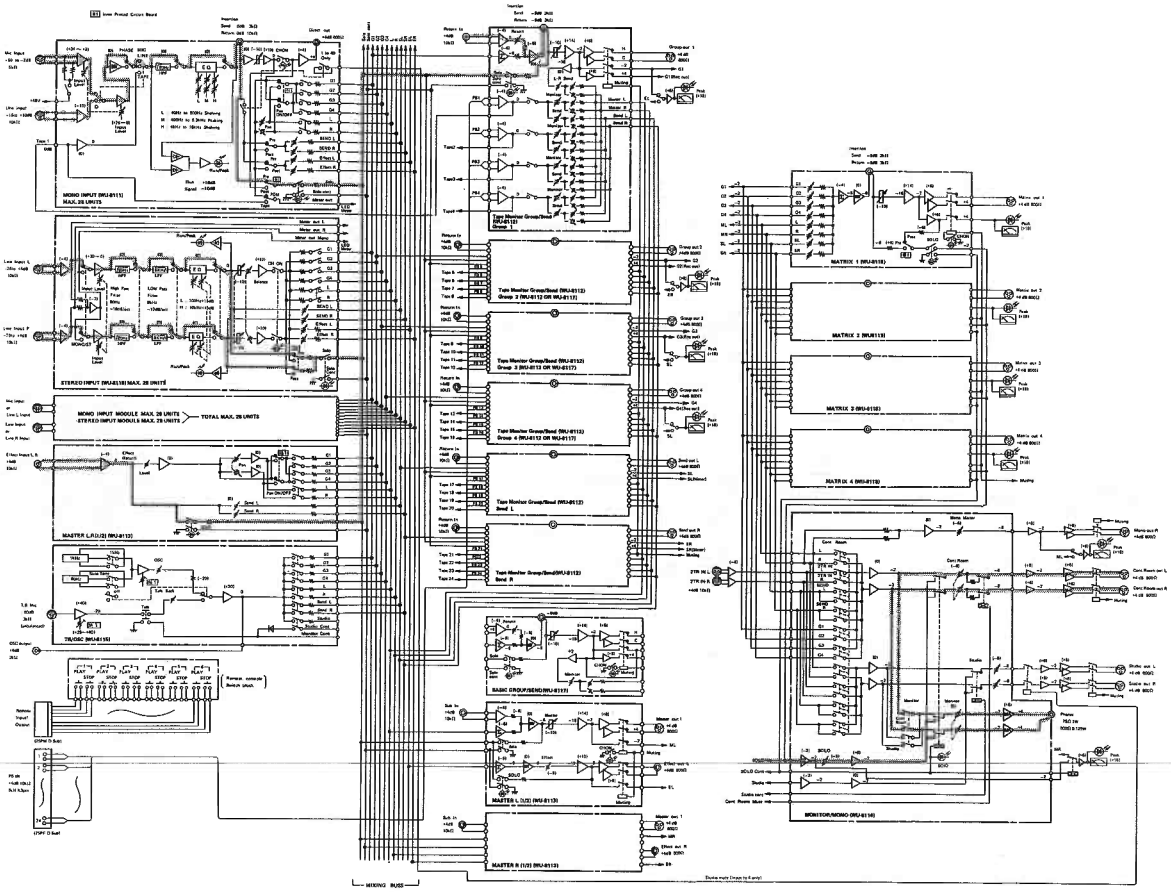

- Set the controls on the Mono Input Module (WU-8111), Stereo Input Module (WU-8116), Monitor Group Module (WU-8112), Basic Group/Send Module (WU-8117), Master Module (WU-8113) and Monitor/Mono Module (WU-8114) as follows.

■ **Mono Input Module (WU-8111)**

- **Set the controls as shown in Table 1.**

Solo Switch : At on position

■ **Stereo Input Module (WU-8116)**

- **Set the controls as shown in Table 2.**

Solo Switch : At on position

■ **Tape Monitor Group/Send Module (WU-8112)**

Solo Switch : At on position

Return Control : At "10" on scale

■ **Basic Group/Send Module (WU-8117)**

Return Control : At "10" on scale

Solo Switch : At on position

■ **Master Module (WU-8113)**

Solo Switch : At on position

■ **Monitor/Mono Module (WU-8114)**

Solo Level Control : At "10" on scale

Cont Room Volume Control : At "10" on scale

Phones Control : At "10" on scale

- The outputs from CONT RM L, R OUTPUT and PHONES OUT should be as indicated in Table 6.

Table 6

INPUT			CONT RM L, R OUTPUT	PHONES
MIC INPUT 1 to 24		–60 dB (± 1 dB)	+4 dB with a 600 ohm load	1W + 1W with an 75 ohm load. 125mW + 125mW with an 600 ohm load.
LINE INPUT 1 to 24		–26 dB (± 1 dB)		
LINE INPUT L, R 1 to 24		–26 dB (± 1 dB)		
EFFECT L, R INPUT		+4 dB (± 1 dB)		
RETURN INPUT	G1 G2 G3 G4	+4 dB (± 1 dB)		

18. LINE INPUT L,R – REC OUT

Set the controls on the Stereo Input Module (WU-8116), Tape Monitor Group/Send Module (WU-8112), and MULTI-TRACK RECORDER INPUT ASSIGN SWITCH as follows.

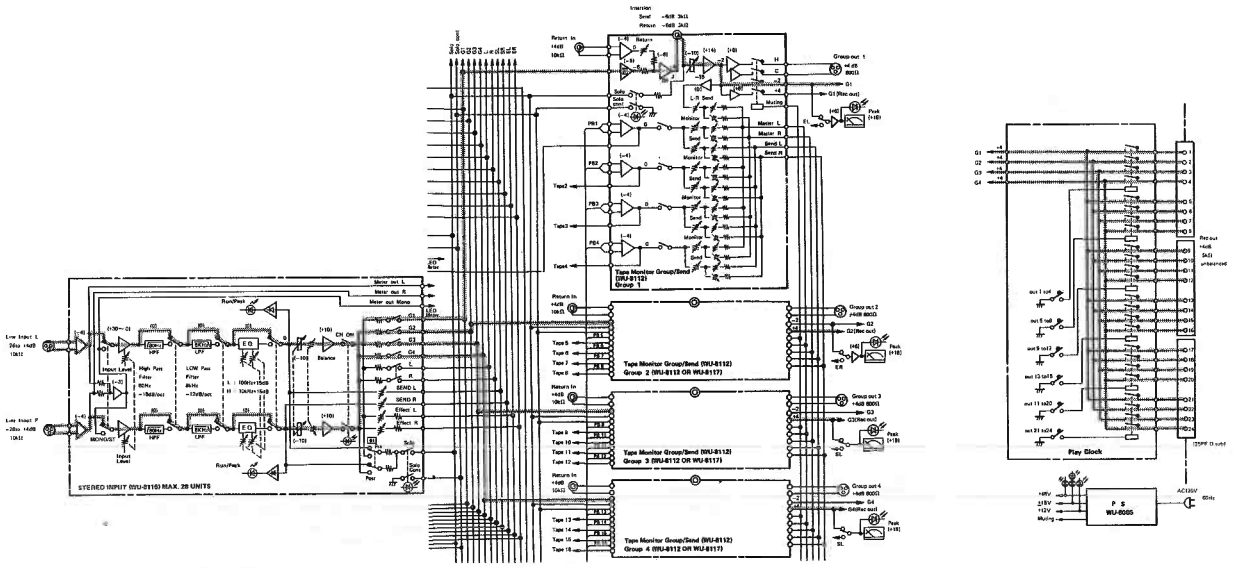

- **Stereo Input Module (WU-8116)**
- Set the Controls as shown in Table 2.
  Program Bus Assign
  Switches [1] to [4] : At on Position
- **Tape Monitor Group/Send Module (WU-8112)**
- Set the controls as shown in Table 3.
- **MULTI-TRACK RECORDER INPUT ASSIGN SWITCH**
  ASSIGN SWITCH : At on Position
- Set the Balance Control on the Stereo Input Module to 1.3.L, and check that the output levels at REC OUT 1 to 24 are +4dB with a high Impedance load.
- Set the Blance Control on the Stereo Input Module to 2.4.R, and check that the output levels at REC OUT 1 to 24 are +4dB with a high Impedance load.

19. MIC INPUT – REC OUT
LINE INPUT – REC OUT

Set the Controls on the Mono Input Module (WU-8111) Tape Monitor Group/Send Module (WU-8112), MULTI-TRACK RECORDER INPUT ASSIGN SWITCH as follows.

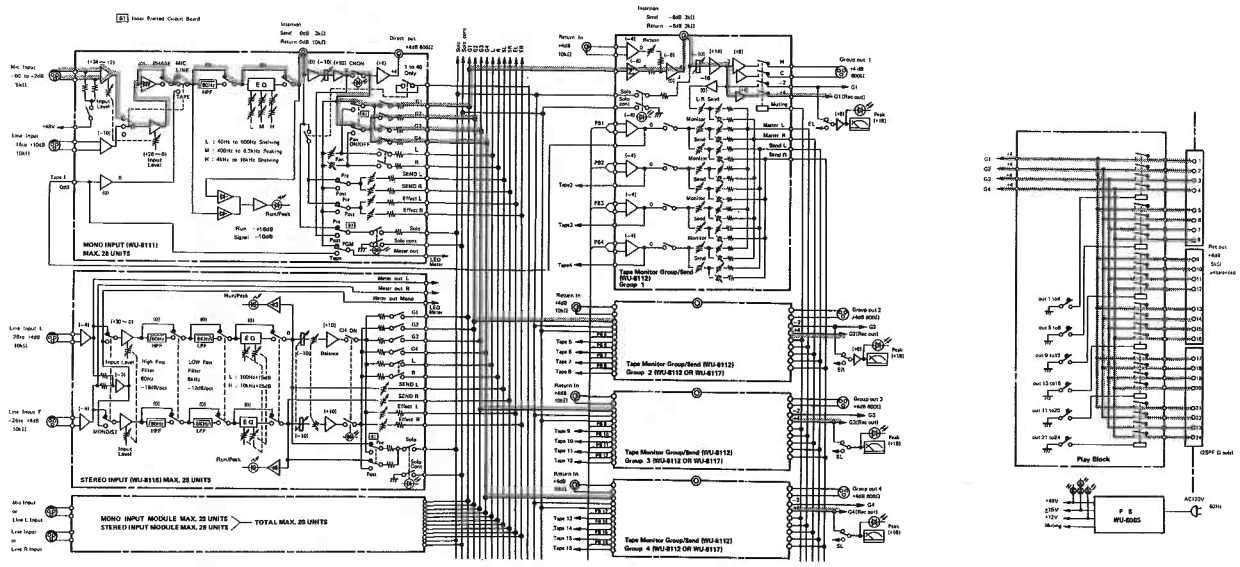

- **Mono Input Module (WU-8111)**
- Set the Controls as shown in Table 1.
  Program Bus Assign
  Switches [1] to [4] : At on positon
- **Tape Monitor Group/Send Module (WU-8112)**
- Set the Controls as shown in Table 3.
- **MULTI-TRACK RECORDER INPUT ASSIGN SWITCH**
  ASSIGN SWITCH : At on Position
- Check that the output levels at REC OUT 1 to 24 are +4dB with a high Impedance load.
- Check all the MIC INPUTs and LINE INPUTs in the same way.

20. PB IN — MASTER OUT
PB IN — SEND OUT

Set the Controls on the Tape Monitor Group/Send Module (WU-8112), Master Module (WU-8113) as follows.

■ **Tape Monitor Group/Send Module (WU-8112)**

- Set the Controls as shown in Table 3.

■ **Master Modul (WU-8113)**

- Set the Controls as shown in Table 5.
- Check that the output level at Group OUT is +4dB with a 600 ohm load.
- Check all the PB INPUTs in the same way.

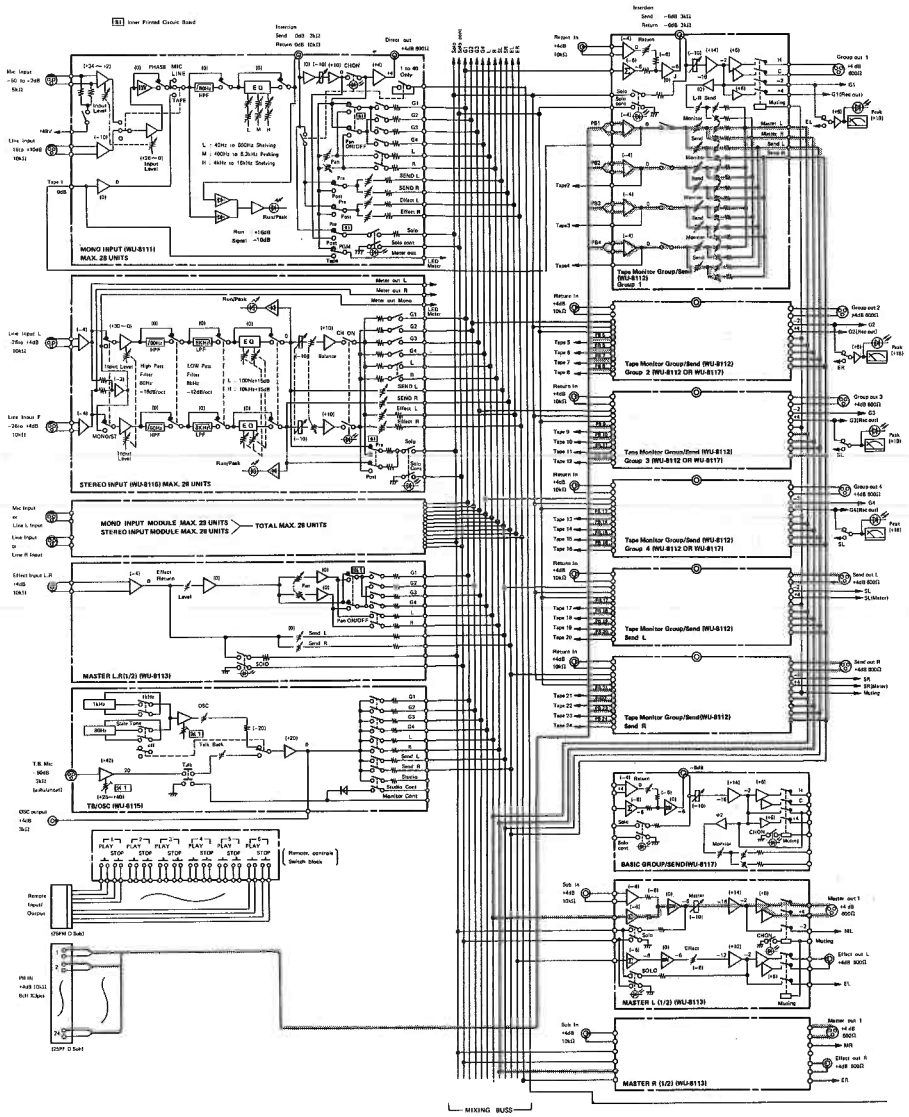

21. 2TR IN — CONT ROOM
2TR IN — STUDIO OUT

Set the controls on the Monitor/Mono Module (WU-8114) as follows.

■ **Monitor Mono Module (WU-8114)**

Cont, Room Control : At "10" on scale
Studio Control : At "10" on scale
Studio Assign
Switch 2TR IN : At on position
Cont. Room Assign
Switch 2TR IN : At on position

- Apply a +4dB (±1dB)/1KHz signal to the 2 TR IN L/R.
- Check that the output levels at CONT, ROOM OUT L/R and STUDIO OUT L/R, are +4dB with a 600 ohm load.

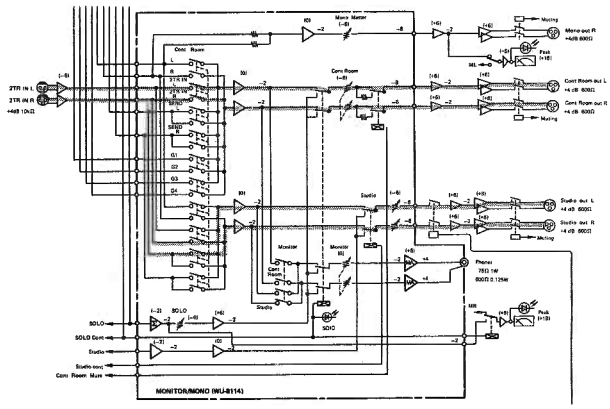

22. LINE INPUT L,R – MATRIX OUT

Set the Controls on the Stereo Input Module (WU-8116), Tape Monitor Group/Send Module (WU-8112), Master Module (WU-8113) and Matrix Module (WU-8118) as follows.

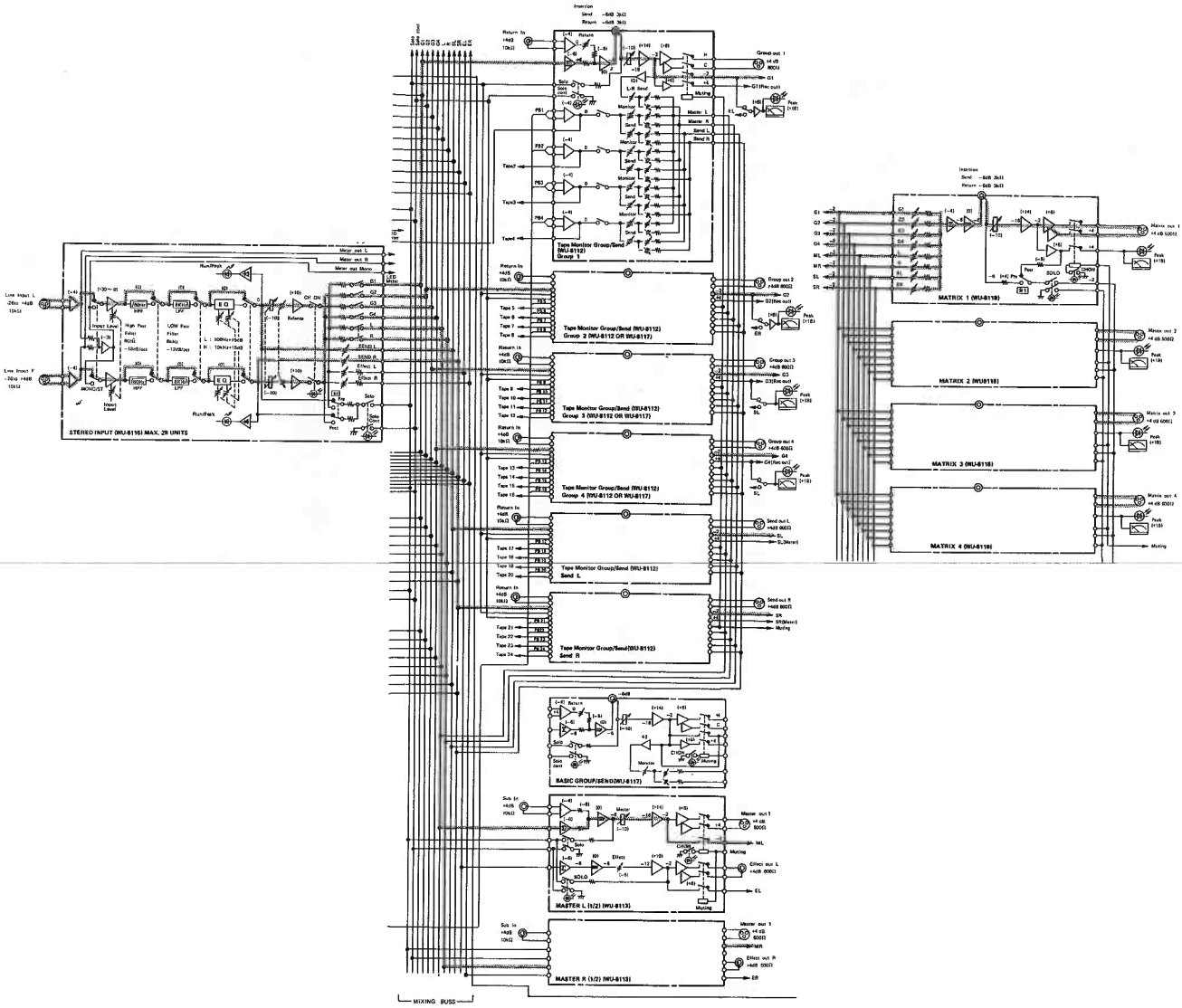

- **Stereo Input Module (WU-8116)**
  Set the Controls as shown in Table 2.
  Program Bus Assign
  Switch 1 to 4,L-R : At on Position
  Send L,R Control : At "10" on scale

- **Tape Monitor Group/Send Module (WU-8112)**
  Set the controls as shown in Table 3.
- **Master Module (WU-8113)**
  Set the controls as shown in Table 5.
- **Matrix Module (WU-8118)**
  Set the controls as shown in Table 7.
- Check that the output level as MATRIX OUT is +4dB with a 600 ohm load.
- Check all the MATRIX OUTs in the same way.

23. MIC INPUT – MATRIX OUT
LINE INPUT – MATRIX OUT

Set the controls on the Mono Input Module (WU-8111), Tape Monitor Group/Send Module (WU-8112), Master Module (WU-8113) and Matrix Module (WU-8118) as follows.

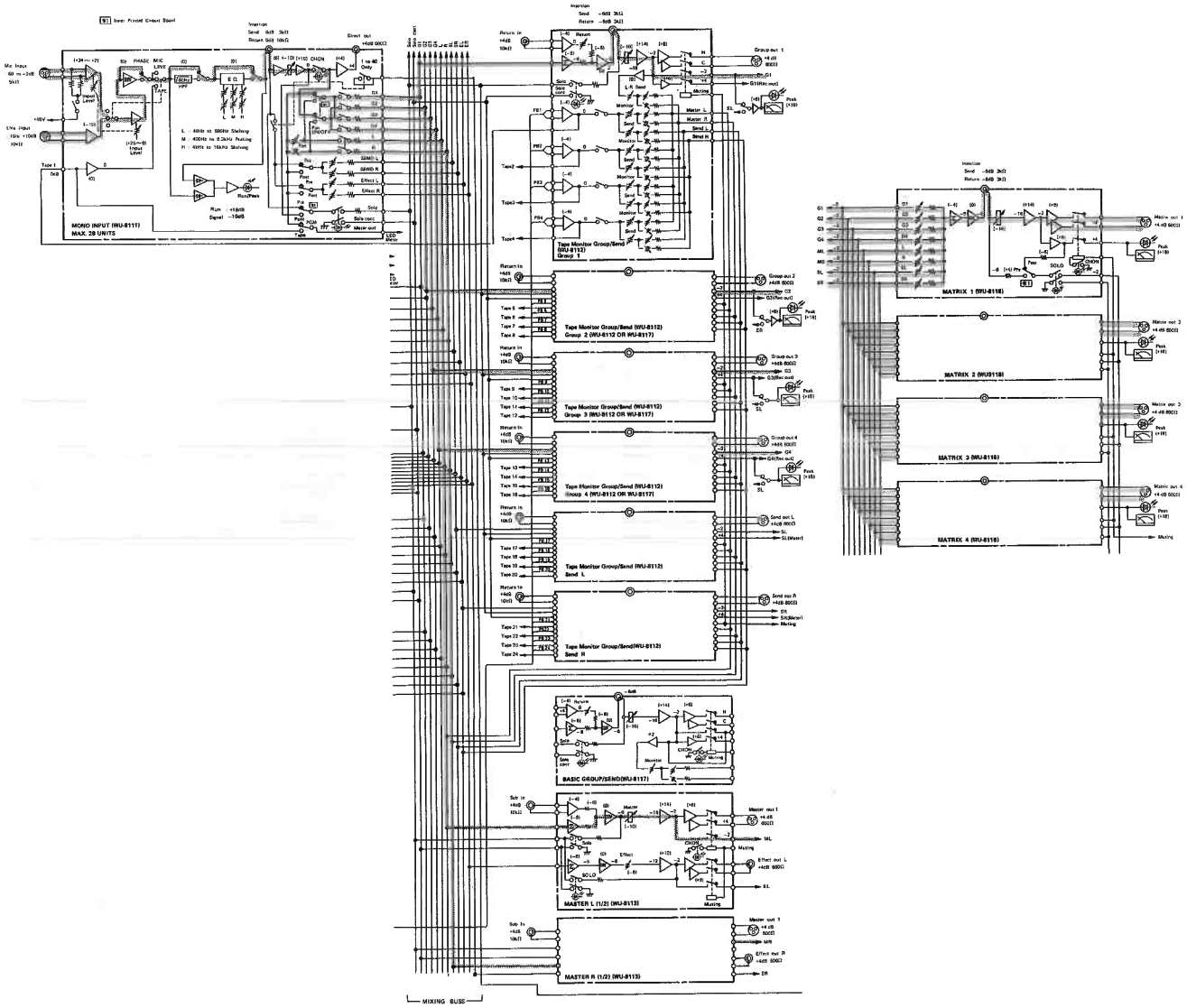

- **Mono Input Module (WU-8111)**
  Set the controls as shown in Table 1
- Program Bus Assign
  Switch [1] to [4] and L-R : At on Position
- Send L,R Control : At "10" on Scale.
- **Tape Monitor Group Module (WU-8112)**
- Set the Controls as shown in Table 3.
- **Master Module (WU-8113)**
- Set the controls as shown in Table 5.
- **Matrix Output Module (WU-8118)**
- Set the Controls as shown in Table 7.
- Check that the output level at MATRIX OUT is +4 dB with a 600 ohm load.
- Check all the MATRIX OUTs in the same way.

Table 7.

Mtric Module (WU-8118)	
CONTROLS	SETTING
Send L,R Group 1, 2, 3, 4 Matrix L,R	At"10" on Scale
Master Fader	At"0" on Scale
Channel On Switch	At on Position.

DISASSEMBLY

Module Removal

- Remove four screws holding the side panel, then remove the side panel. (Fig. 1)

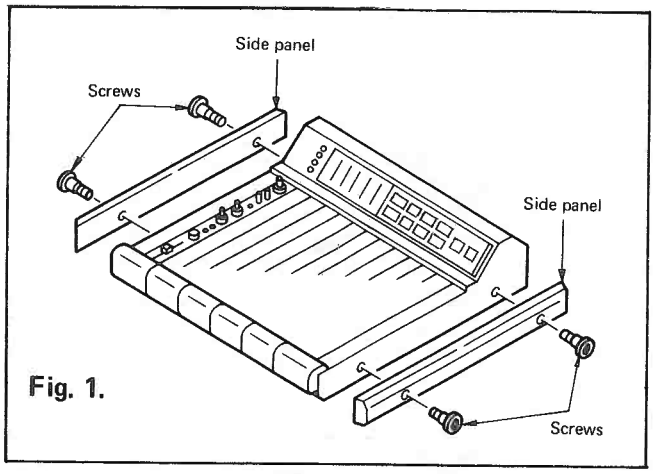

Fig. 1.

- Remove two screws ① from the arm rest. (Fig. 2)
- Remove the arm rest by lifting it up as shown below.

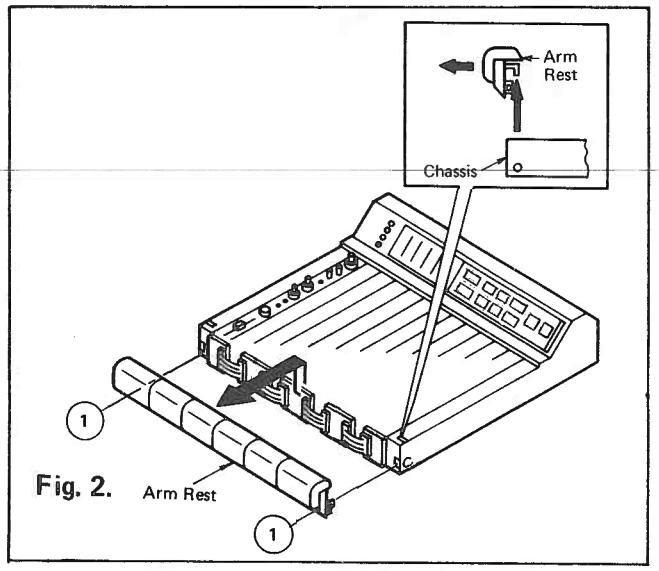

Fig. 2.

- Remove the screws ② holding the module and remove the connector. (Fig. 3)
- Remove the module unit by lifting the front first, and pulling out the module, taking care not to damage the adjacent modules.
- To reassemble, reverse the above procedure.

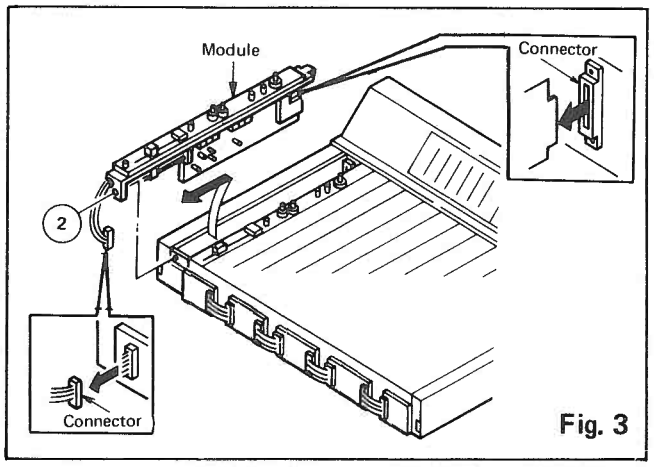

Fig. 3

Rear Cover Removal

- Remove the rear cover by removeing the eleven screws ③ (Fig. 4)
- A hook at the bottom of the back of the rear cover holds it in place by hooking onto the chassis.

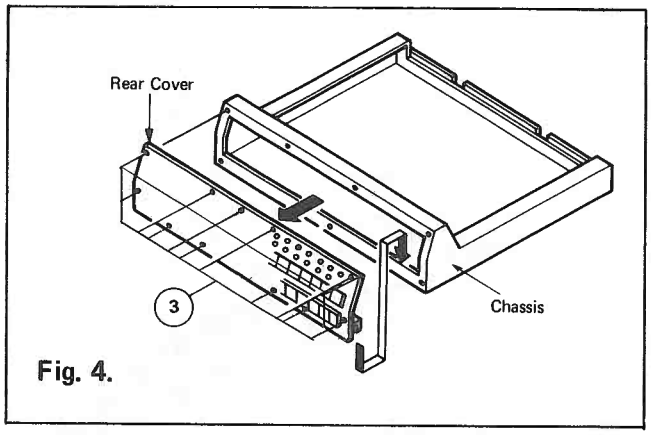

Fig. 4.

Replacing the VU meter

- Remove five screws ④ holding the meter cover. (Fig. 5)
- Pull the meter cover to the front and lift up from the meter.
- Pull the meter cover forward, remove the hook (screw ⑤), then lay it down in front of the meter.

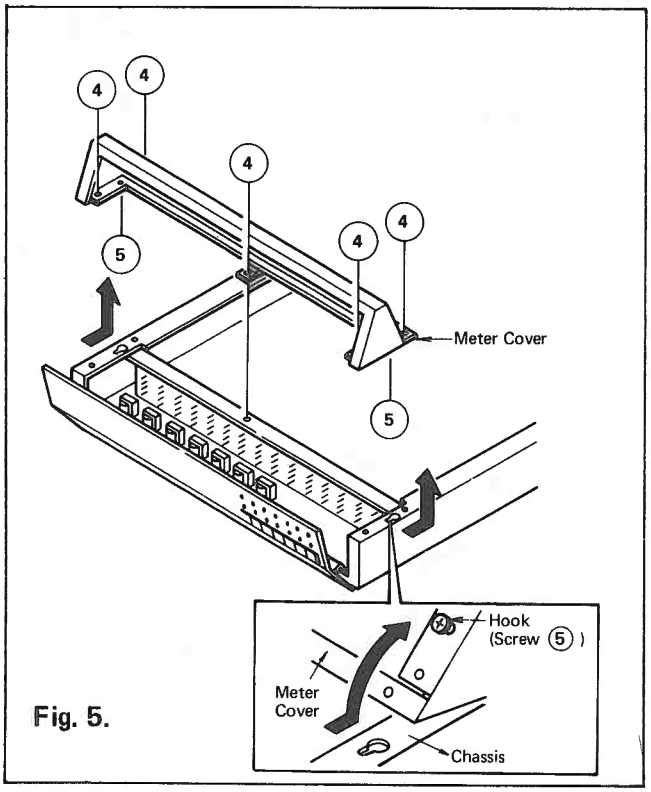

Fig. 5.

- Remove the connector and six screws ⑥ holding the chassis, then remove the meter chassis. (Fig. 6)
- Remove the hexagonal nut and the lug terminal from the back of the small VU meter.

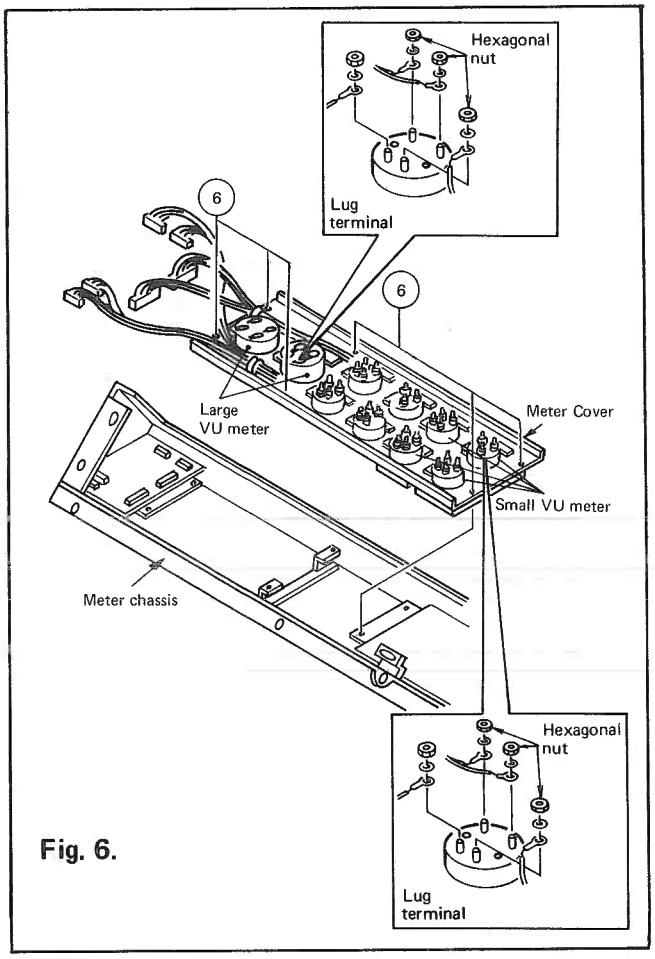

Fig. 6.

- Remove 20 screws ⑦ holding the large and small VU meters, then remove the VU meters. (Fig. 7)

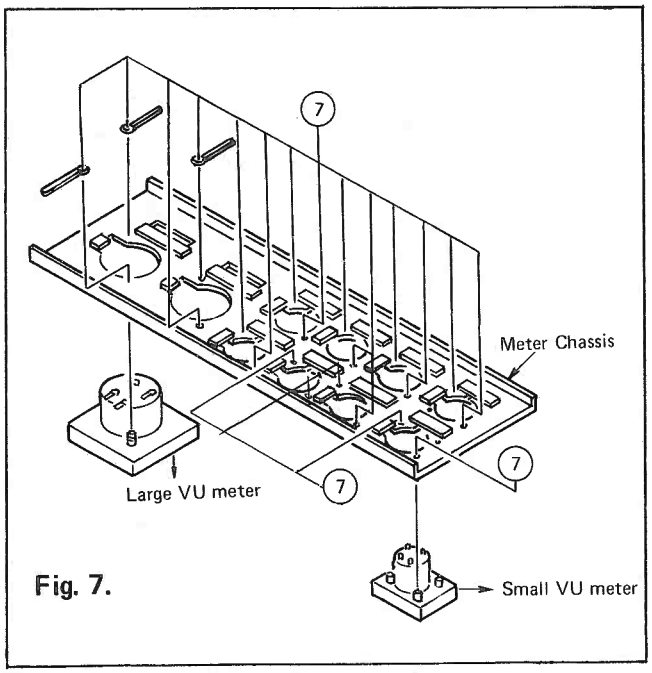

Fig. 7.

Replacing the VU meter LED

- Remove the acrylic cover from the VU meter. (Fig. 8)
- Unsolder the LED and replace it.

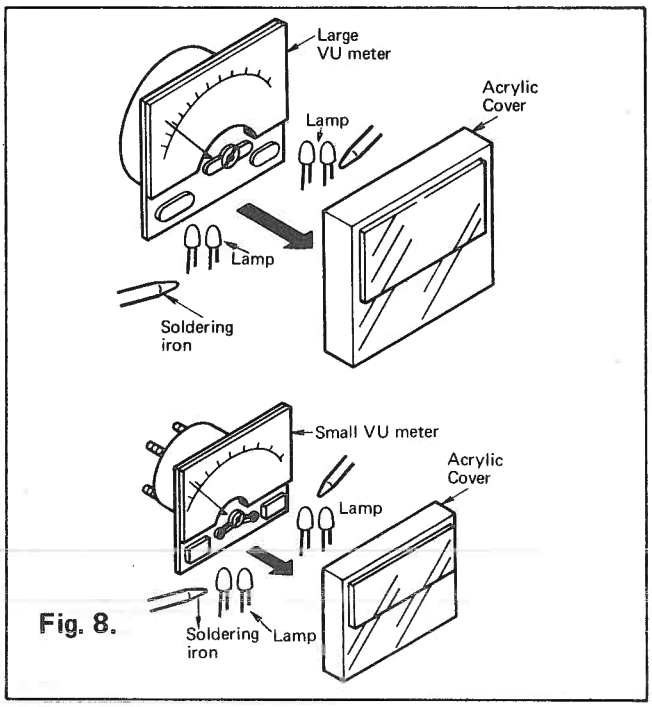

Fig. 8.

ADJUSTMENT

■VU Meter Adjustment

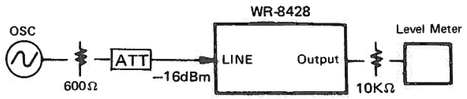

- Check the zero position of the VU meter in a no signal condition. Adjust to zero when deviated.
- Input the oscillator output (–16dBm) to LINE.
- Set the controls on the Mono Input Module (WU-8111), Tape Monitor Group/Send Module (WU-8112), Basic Group/Send Module (WU-8117), Master Module (WU-8113) Matrix Module (WU-8118) .and Monitor Module (WU-8114) as follows.

Mono Input Module (WU-8111)

Input Level Switch :	At LINE position
Input Level Control :	At"–16" on scale
Equalizer On Switch :	At "OFF" position
High Pass Filter Switch :	At "OFF" position
Effect Control :	At "10" on scale
Pre/Post Select Switch :	At "POST" position
Send L, R Control :	At "10" position
Pre/Post Select Switch :	At "POST" position
Program Bus Assign Switch 1 to 4, L.R :	At "ON" position
Pan Control :	At "C" position
Channel On Switch :	At "ON" position
Input Fader :	At "0" on scale

Tape Monitor Group/Send Module (WU-8112)
Basic Group/Send Module (WU-8117)

Channel On Switch :	At"ON" Position (Only WU-8117)
Group Fader :	At"0" on scale

Master Module (WU-8113)

Channel on Switch :	At"ON" Position
Master Effect Control :	At "10" on scale
Master Send L,R Control :	At "10" on scale
Master Fader :	At "0" on scale

Monitor Module (WU-8114)

Mono Master Control :	At "0" on scale

- Each output without MASTER L, R, MONO OUT become about +4dBm. The VU meter indicates near 0 VU. Frist, adjust the input fader or the oscillator level so that the output of Group 1 accurately becomes +4dBm.
- Set the VU meter selectors so that Group 1 can monitor it.
- Rotate the adjusting variable resistor 1 on the front panel and set so that the meter indicates 0 VU.
- Set the outputs (reading of the external level meter) of Groups 2,3,4 and Matrix 1 to 4 to +4dBm, then adjust them.
- L, R outputs become about +2.5dBm because the Pan Control is at "C" position and the VU meter indicates –1.5 VU.
- Adjust the input fader or the oscillator output level so that the outputs of L and R become +4dBm.
  Adjust the VR1 and VR2 on the circuit board located on the rear of the meter so that the meter indicates 0 VU.
- Rotate the adjusting variable resistors L and R on the rear panel and set so that the meter indicates 0 VU.
- Set the outputs (readings of the external levelmeter) of Effect L, R, Send L, R and Mono Master to +4dBm.
- Confirm that each output is within +4dBm when the VU meter selectors are selected.
- When the outputs of Master L and R are +4dBm, the output of Mono out is also due to +4dBm.

Adjustment Position

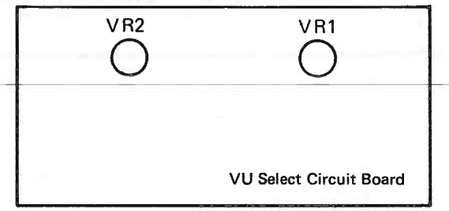

– View from Conductor –

VU Meter Selectors

	OFF	ON
1	Gronp 1	Effect L
2	Group 2	Effect R
3	Group 3	Send L
4	Group 4	Send R
L	Master L	Mono Master

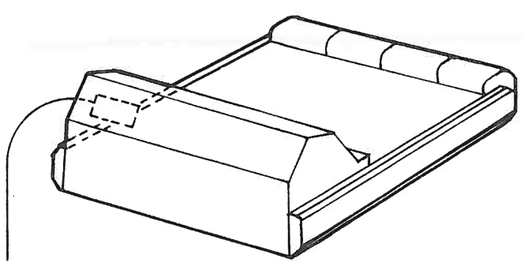

VU Select Circuit Board

- Open the rear panel.
- Set the VU meter selectors to ON after G1 through 4, L and R located on the upper left on the rear panel are adjusted. The indication error should be within ±0.5 VU. Each output should be +4dBm with a 600-ohm resistor.

■LED Meter Adjustment

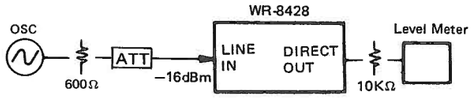

- Input a 1KHz, –16dBm signal to the LINE INPUT from the oscillator.

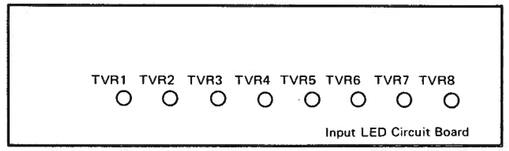

– View from Conductor Side –

- Set the Controls on the Mono Input Module (WU-8111) and Matrix Module (WU-8118) as follows.

Mono Input Module (WU-8111)

Meter Select Switch :	At PGM Position
Input Level Switch :	At LINE Position
Input Level Control :	At"–16" on Scale
Equalizer On Switch :	At"OFF" Position
High Pass Filter Switch :	At"OFF" Position
Pan Control :	At "C" position
Channel On Switch :	At"ON" Position
Input Fader :	At "0" on Scale

Matrix Module (WU-8118)

Select the one of the control in the G1–G4 or Send L.R. :	At"10" on Scale
Input Fader :	At"0" on scale

- Direct Out become about +4dBm, then adjust the input fader or the oscillator output level so that the Direct out accurately become +3.5dBm.
- Rotate VR1–8 on the LED meter circuit board to adjust the lighting level of LED meter to 0dB.
- Adjust each VR corresponding to the LED meter, referring to the table below.

LED meter NO.			VR NO.
1	9	17	1
2	10	18	2
3	11	19	3
4	12	20	4
5	13	21	5
6	14	22	6
7	15	23	7
8	16	24	8

CIRCUIT BOARD AND WIRING CONNECTION DIAGRAM OF WU-8111

– View from Components Side –

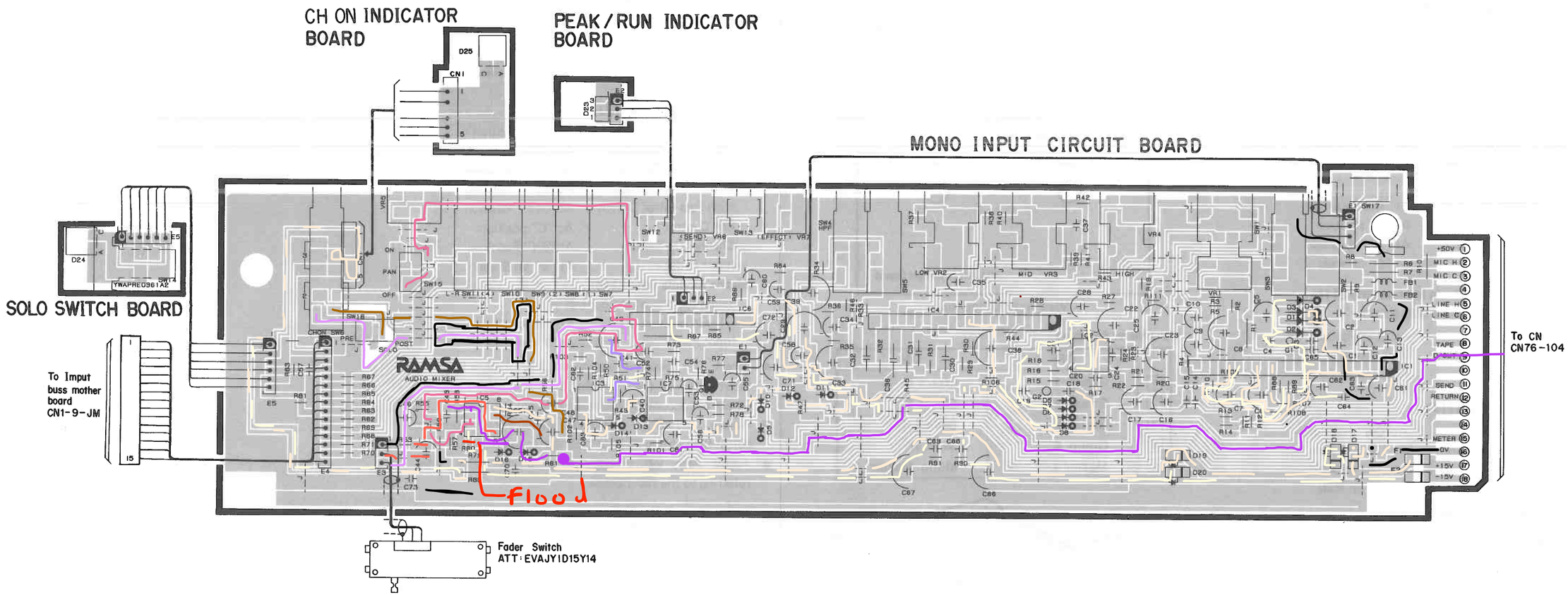

SCHEMATIC DIAGRAM OF WU-8111

MONO INPUT CIRCUIT BOARD

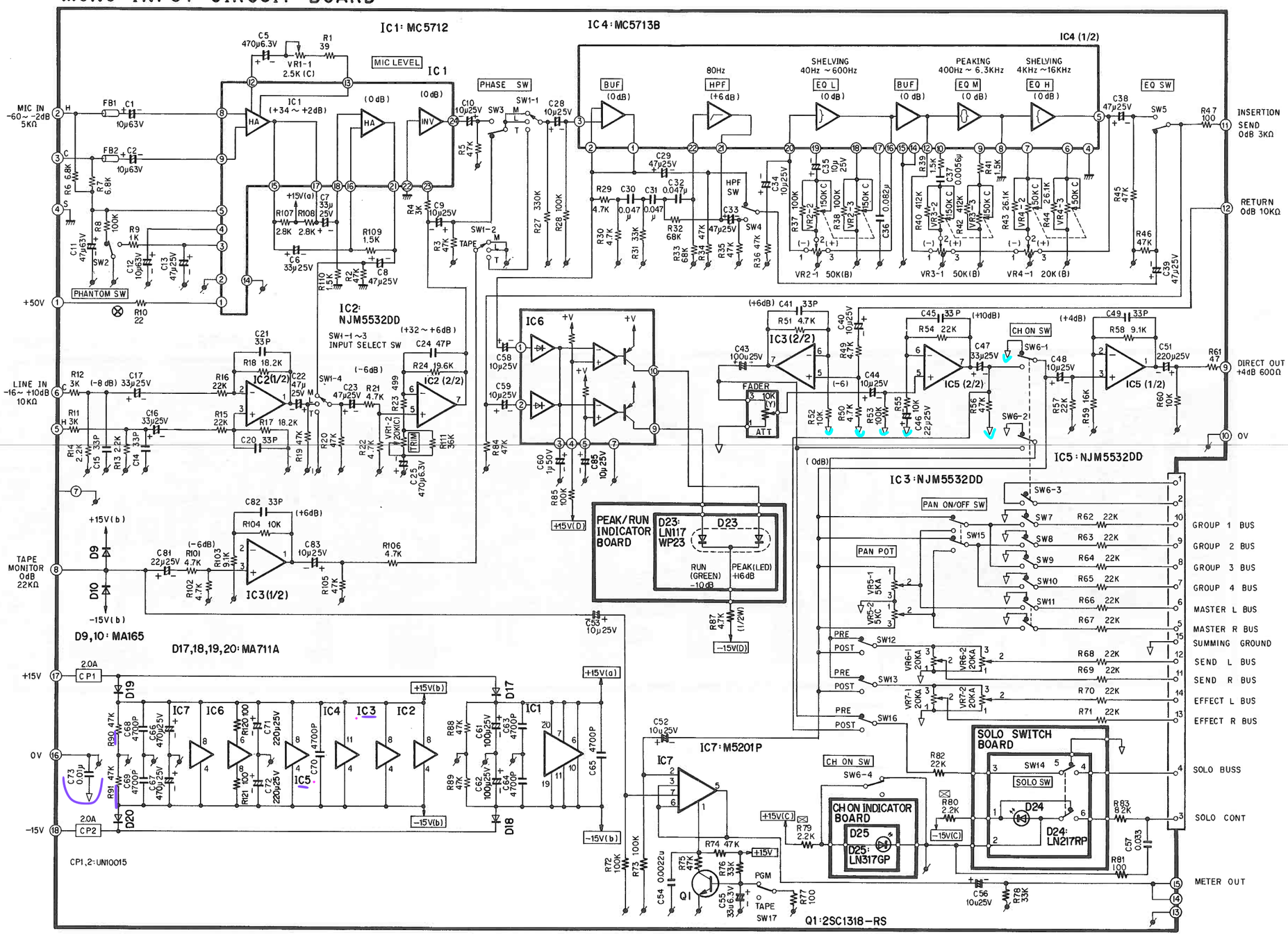

Notes :

1. All resistor values are in ohms 1/4W ±5% unless otherwise specified, Ⓟ .....±1%.
2. All capacitor values are in farads 50V unless otherwise specified.
3. The mark ⊗ shows fuse resistor.
4. The mark ◎ shows metal film.
5. The mark ▭ shows wirewound.
6. The mark ⊠ shows incombustible metal film.
7. The mark ▽ shows summing ground.
8. The mark ⏚ shows 0V.
9. The mark ⏚ shows chassis.
10. Do not order components by part NO. written on schematic diagram. Use replacement parts list.

CIRCUIT BOARD AND WIRING CONNECTION DIAGRAM OF WU-8112

– View from Components Side –

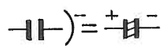

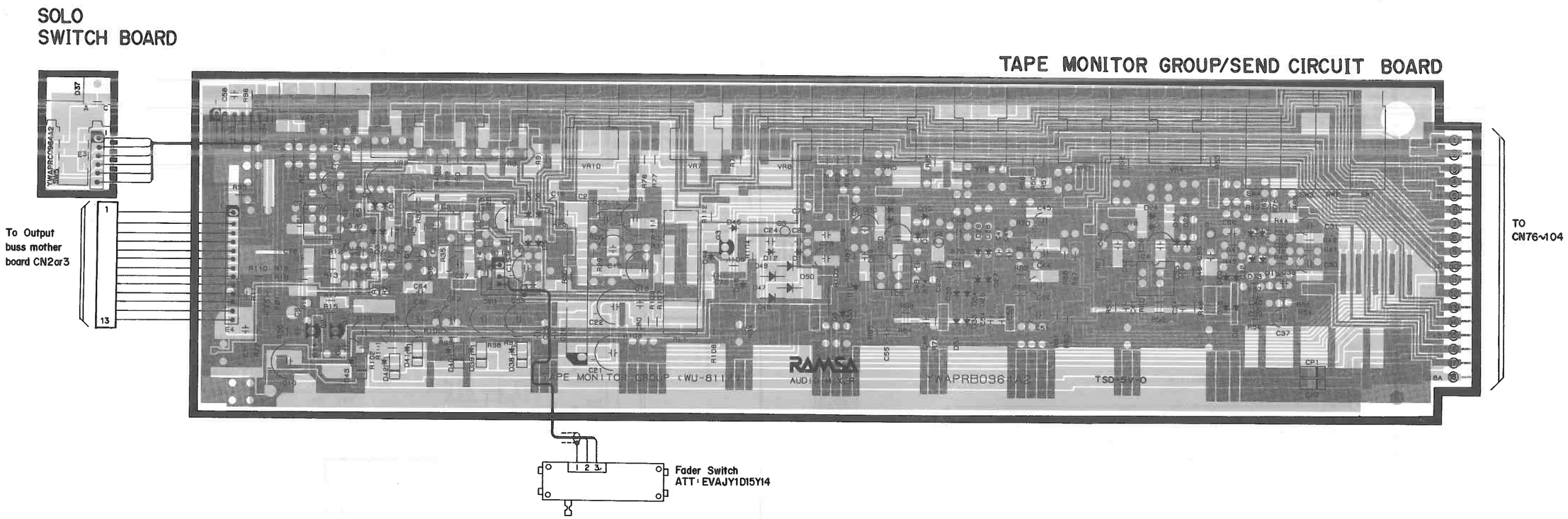

SCHEMATIC DIAGRAM OF WU-8112

TAPE MONITOR GROUP/SEND CIRCUIT BOARD

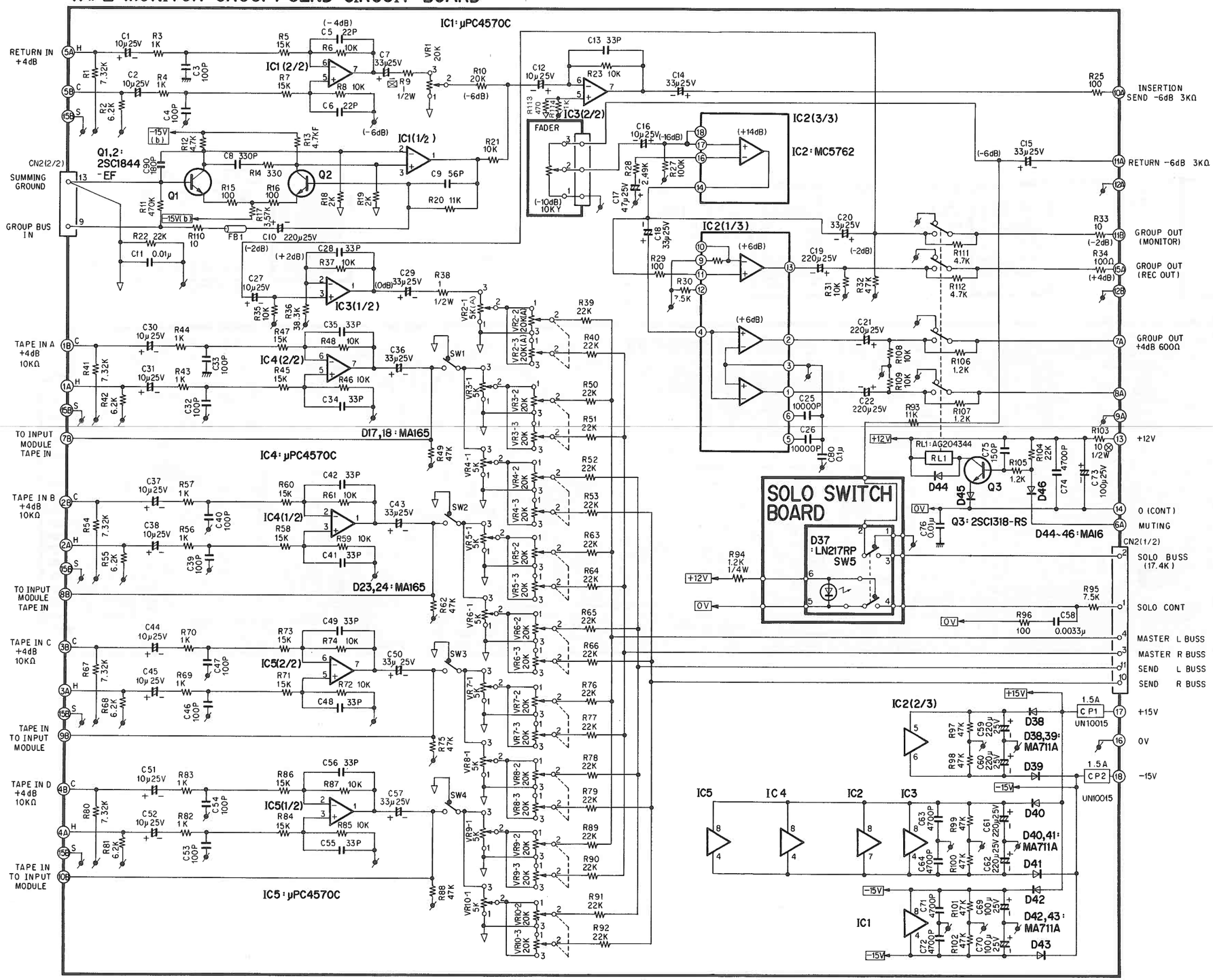

Notes :

1. All resistor values are in ohms 1/4W ±5% unless otherwise specified, ⊕ .....±1%.
2. All capacitor values are in farads 50V unless otherwise specified.
3. The mark ⊗ shows fuse resistor.
4. The mark ◎ shows metal film.
5. The mark ▭ shows wirewound.
6. The mark ⊠ shows incombustible metal film.
7. The mark ▽ shows summing ground.
8. The mark ⏚ shows 0V.
9. The mark ⏚ shows chassis.
10. Do not order components by part NO. written on schematic diagram. Use replacement parts list.

CIRCUIT BOARD AND WIRING CONNECTION DIAGRAM OF WU-8113

– View from Components Side –

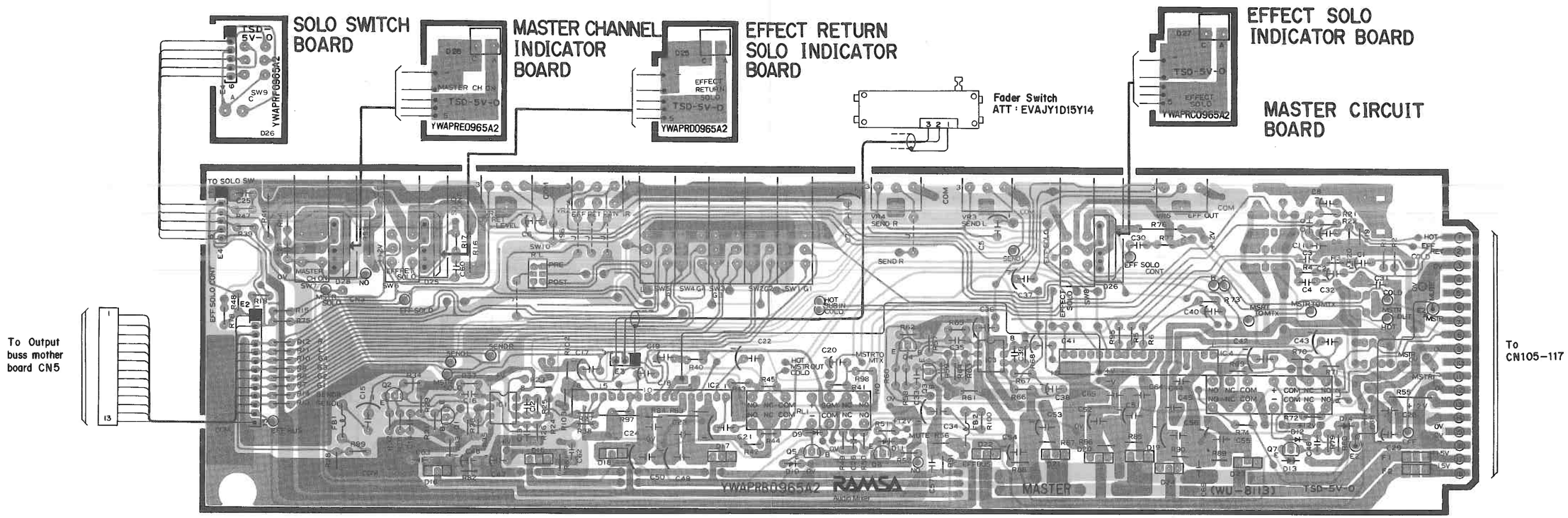

SCHEMATIC DIAGRAM OF WU-8113

MASTER CIRCUIT BOARD

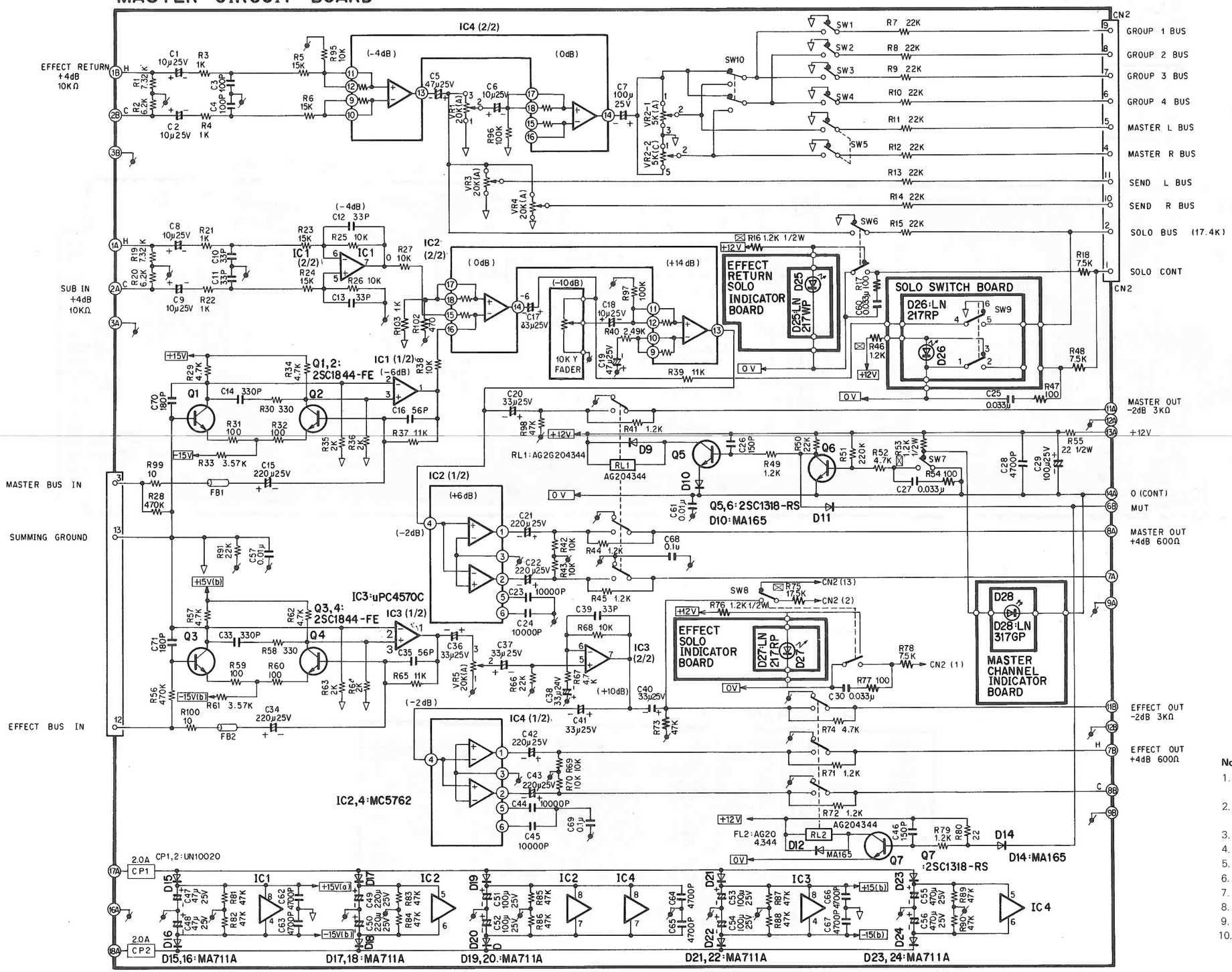

Notes :

1. All resistor values are in ohms 1/4W ±5% unless otherwise specified, ⊕ .....±1%.
2. All capacitor values are in farads 50V unless otherwise specified.
3. The mark ⊗ shows fuse resistor.
4. The mark ◎ shows metal film.
5. The mark ▭ shows wirewound.
6. The mark ⊠ shows incombustible metal film.
7. The mark ▽ shows summing ground.
8. The mark ⏚ shows 0V.
9. The mark ⏦ shows chassis.
10. Do not order components by part NO. written on schematic diagram. Use replacement parts list.

CIRCUIT BOARD AND WIRING CONNECTION DIAGRAM OF WU-8114

– View from Components Side –

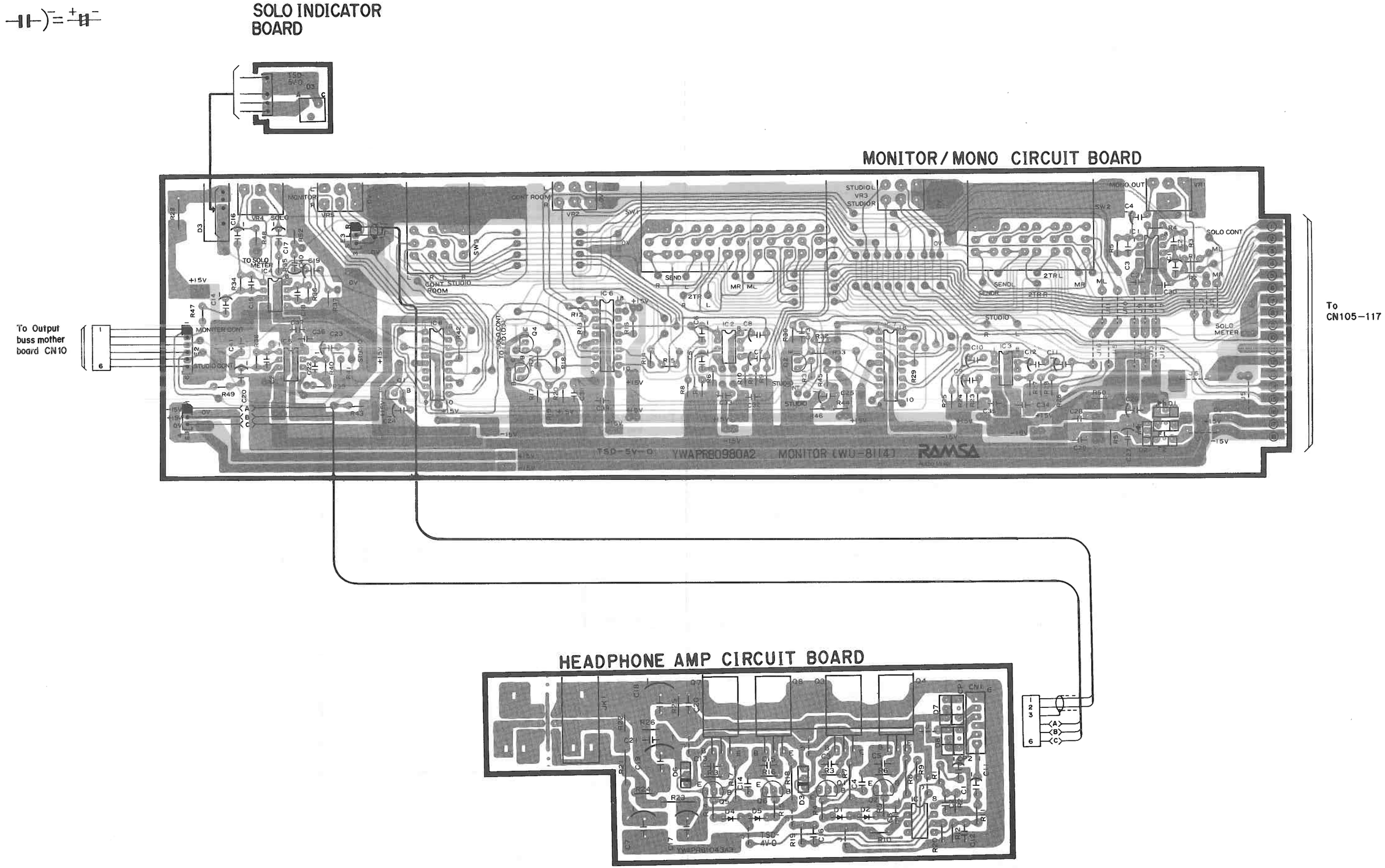

SCHEMATIC DIAGRAM OF WU-8114

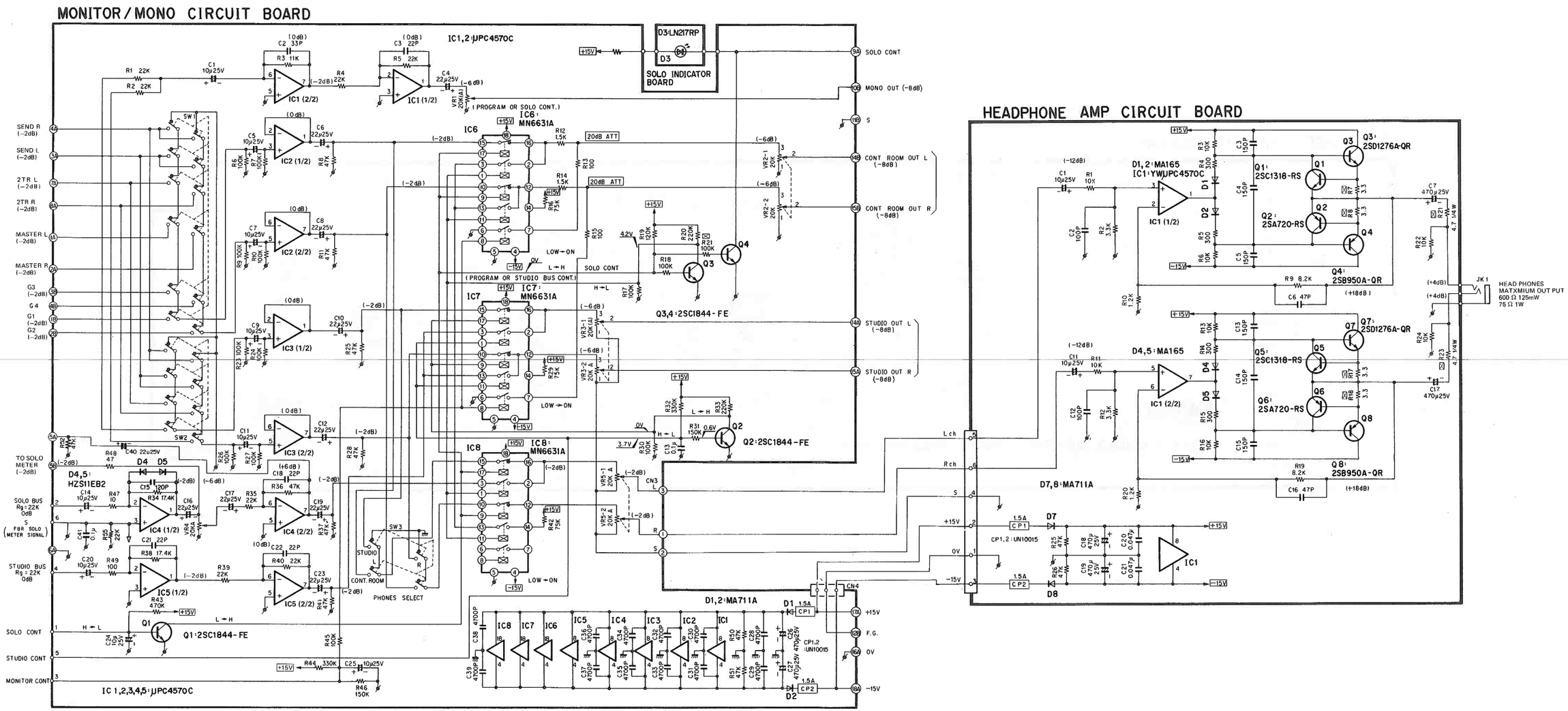

Notes :

1. All resistor values are in ohms 1/4W ±5% unless otherwise specified, ⊕ .....±1%.
2. All capacitor values are in farads 50V unless otherwise specified.
3. The mark ⊗ shows fuse resistor.
4. The mark ◎ shows metal film.
5. The mark ▭ shows wirewound.
6. The mark ⊠ shows incombustible metal film.
7. The mark ▽ shows summing ground.
8. The mark ⏚ shows 0V.
9. The mark ⏚ shows chassis.
10. Do not order components by part NO. written on schematic diagram. Use replacement parts list.

CIRCUIT BOARD AND WIRING CONNECTION DIAGRAM OF WU-8115

– View from Components Side –

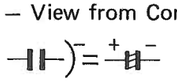

T.B./OSC CIRCUIT BOARD

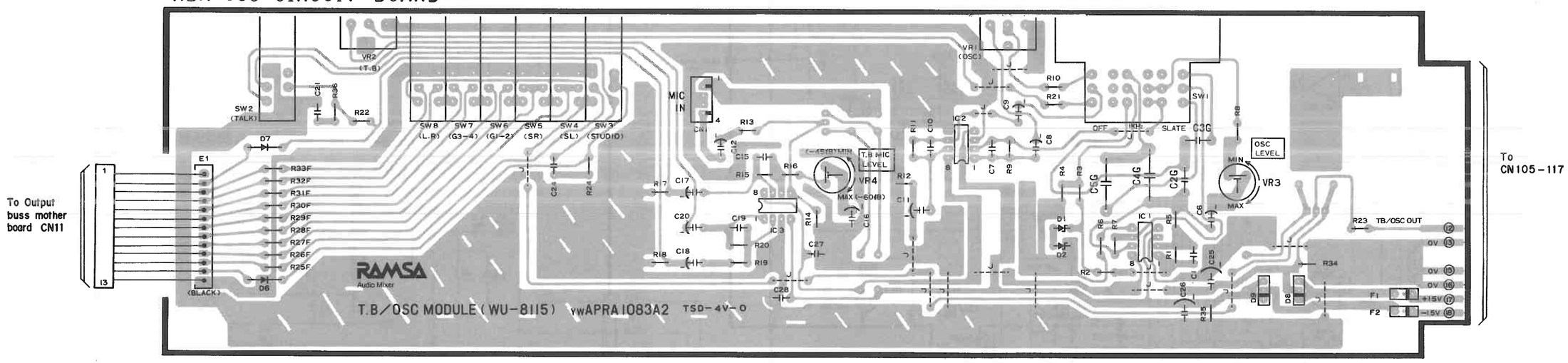

SCHEMATIC DIAGRAM OF WU-8115

T.B./OSC CIRCUIT BOARD

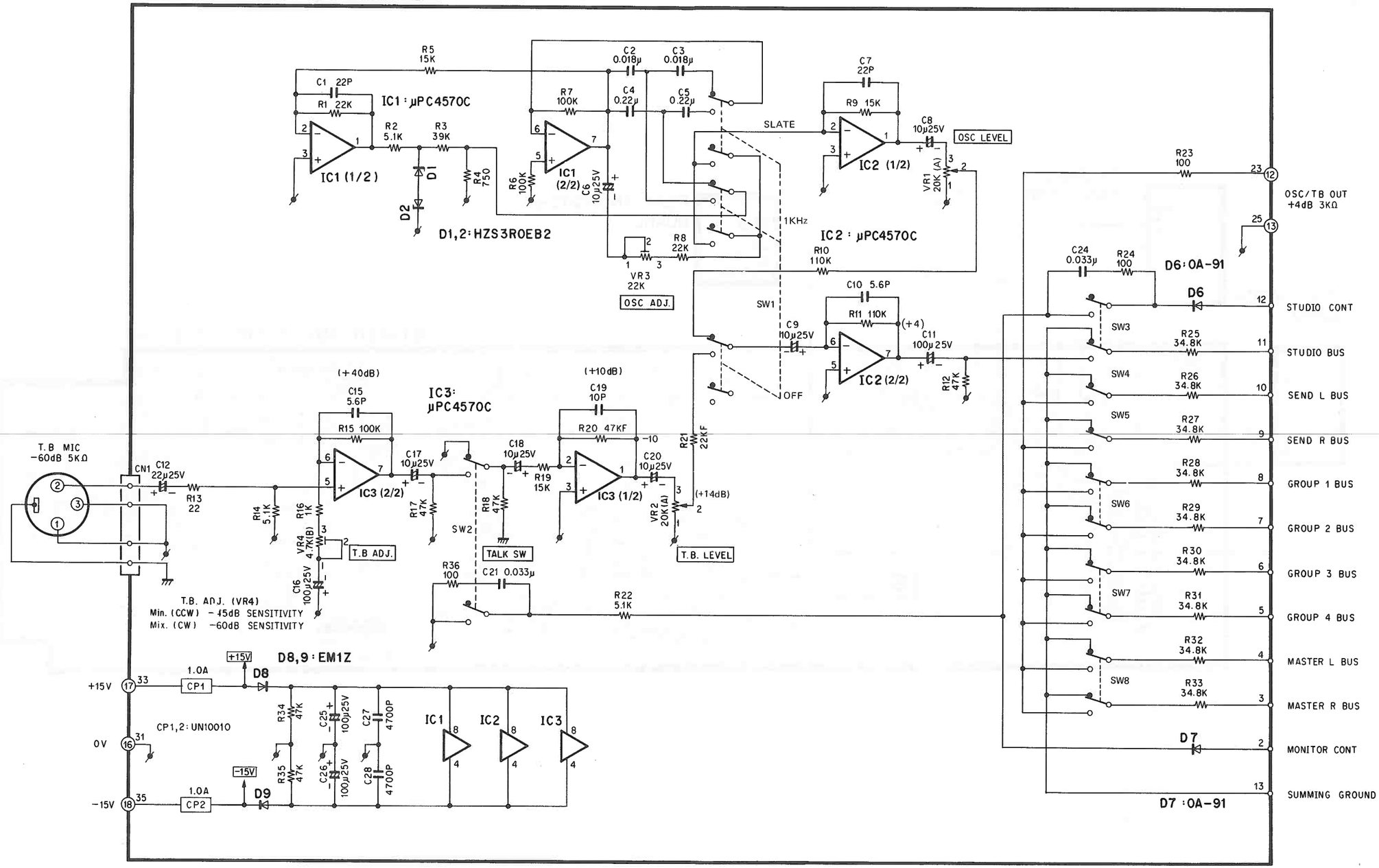

Notes :

1. All resistor values are in ohms 1/4W ±5% unless otherwise specified, ⊕ .....±1%.
2. All capacitor values are in farads 50V unless otherwise specified.
3. The mark ⊗ shows fuse resistor.
4. The mark ◎ shows metal film.
5. The mark ▭ shows wirewound.
6. The mark ⊠ shows incombustible metal film.
7. The mark ▽ shows summing ground.
8. The mark ⏚ shows 0V.
9. The mark ⏚ shows chassis.
10. Do not order components by part NO. written on schematic diagram. Use replacement parts list.

CIRCUIT BOARD AND WIRING CONNECTION DIAGRAM OF WU-8116

– View from Components Side –

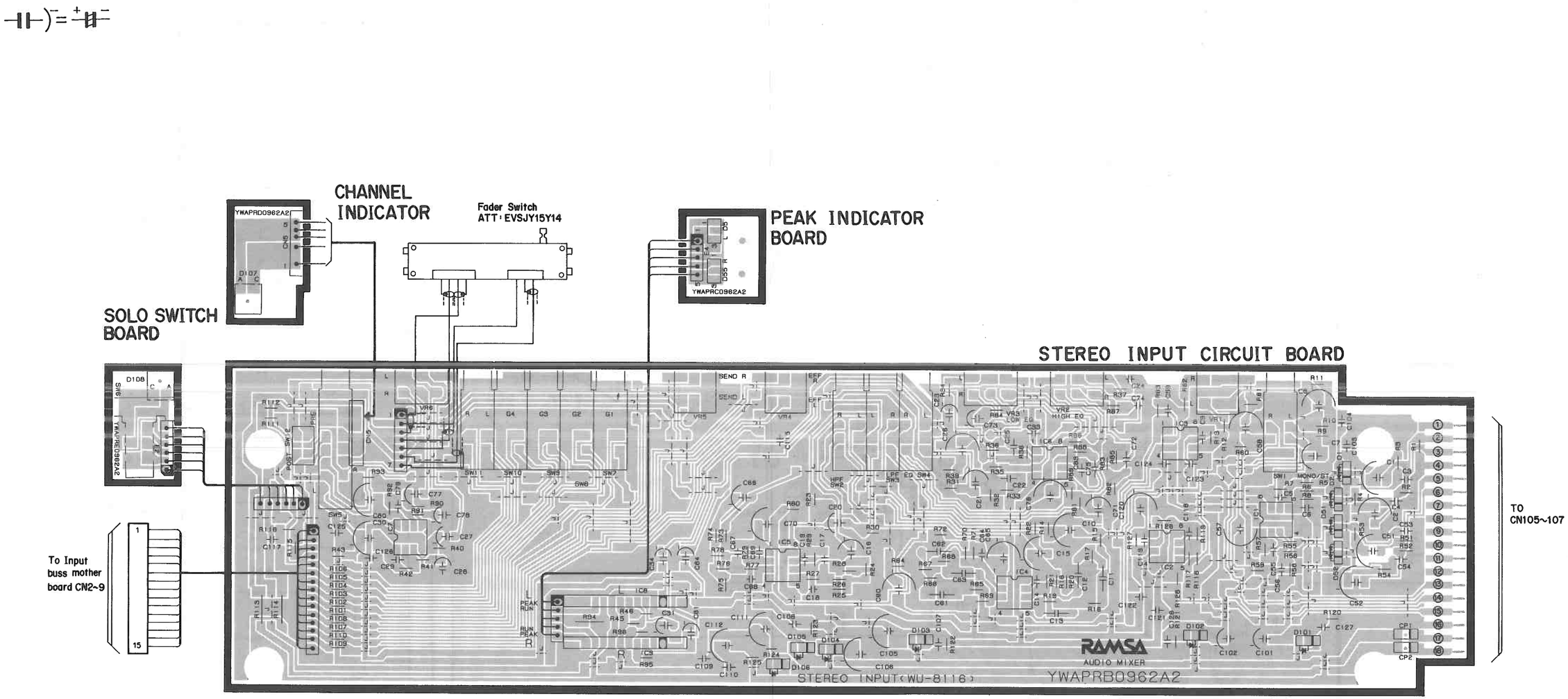

SCHEMATIC DIAGRAM OF WU-8116

STEREO INPUT CIRCUIT BOARD

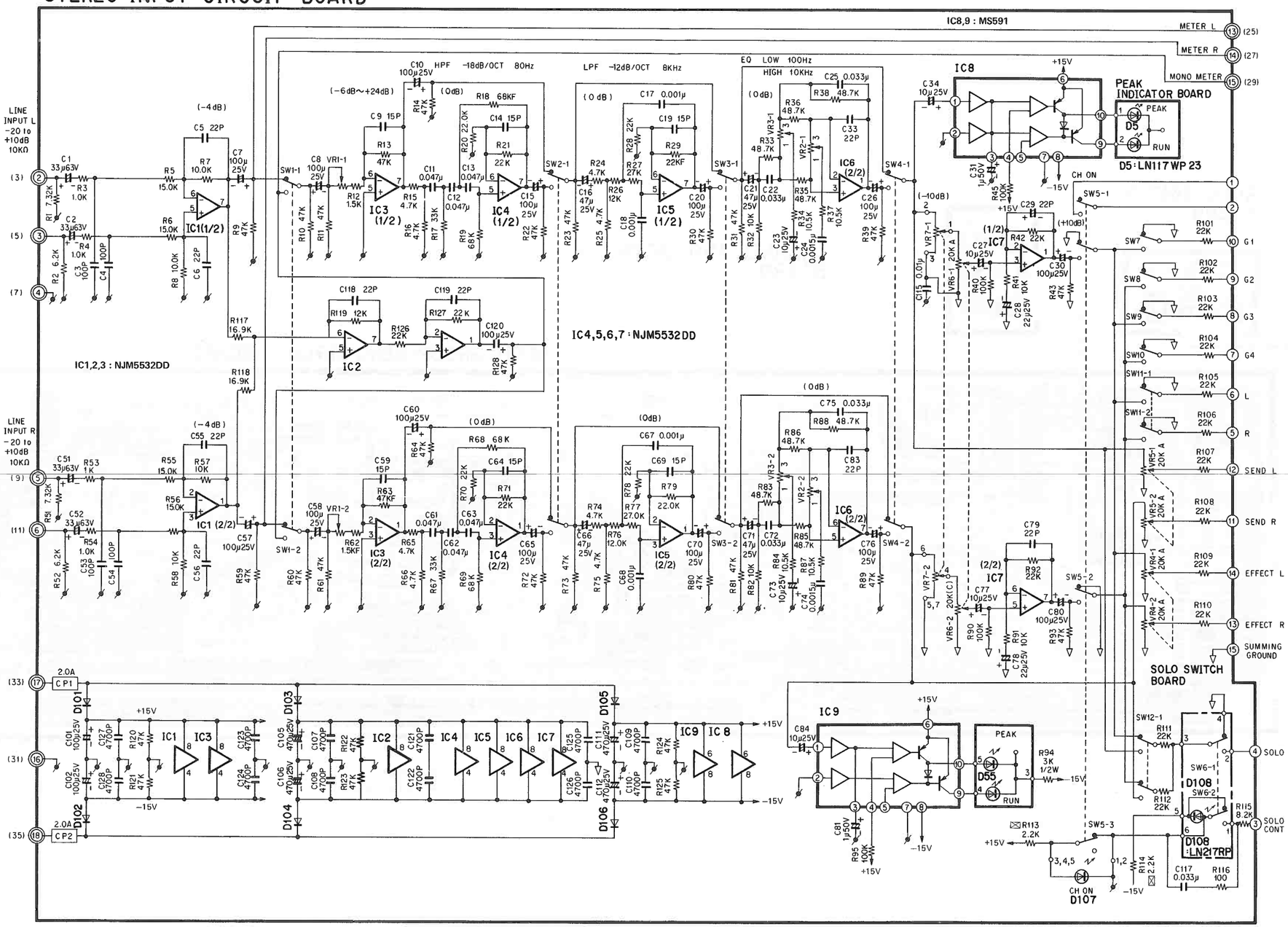

Notes :

1. All resistor values are in ohms 1/4W ±5% unless otherwise specified, Ⓟ .....±1%.
2. All capacitor values are in farads 50V unless otherwise specified.
3. The mark ⊗ shows fuse resistor.
4. The mark ◎ shows metal film.
5. The mark ▭ shows wirewound.
6. The mark ⊠ shows incombustible metal film.
7. The mark ▽ shows summing ground.
8. The mark ⏚ shows 0V.
9. The mark ⏚ shows chassis.
10. Do not order components by part NO. written on schematic diagram. Use replacement parts list.

CIRCUIT BOARD AND WIRING CONNECTION DIAGRAM OF WU-8117

– View from Components Side –

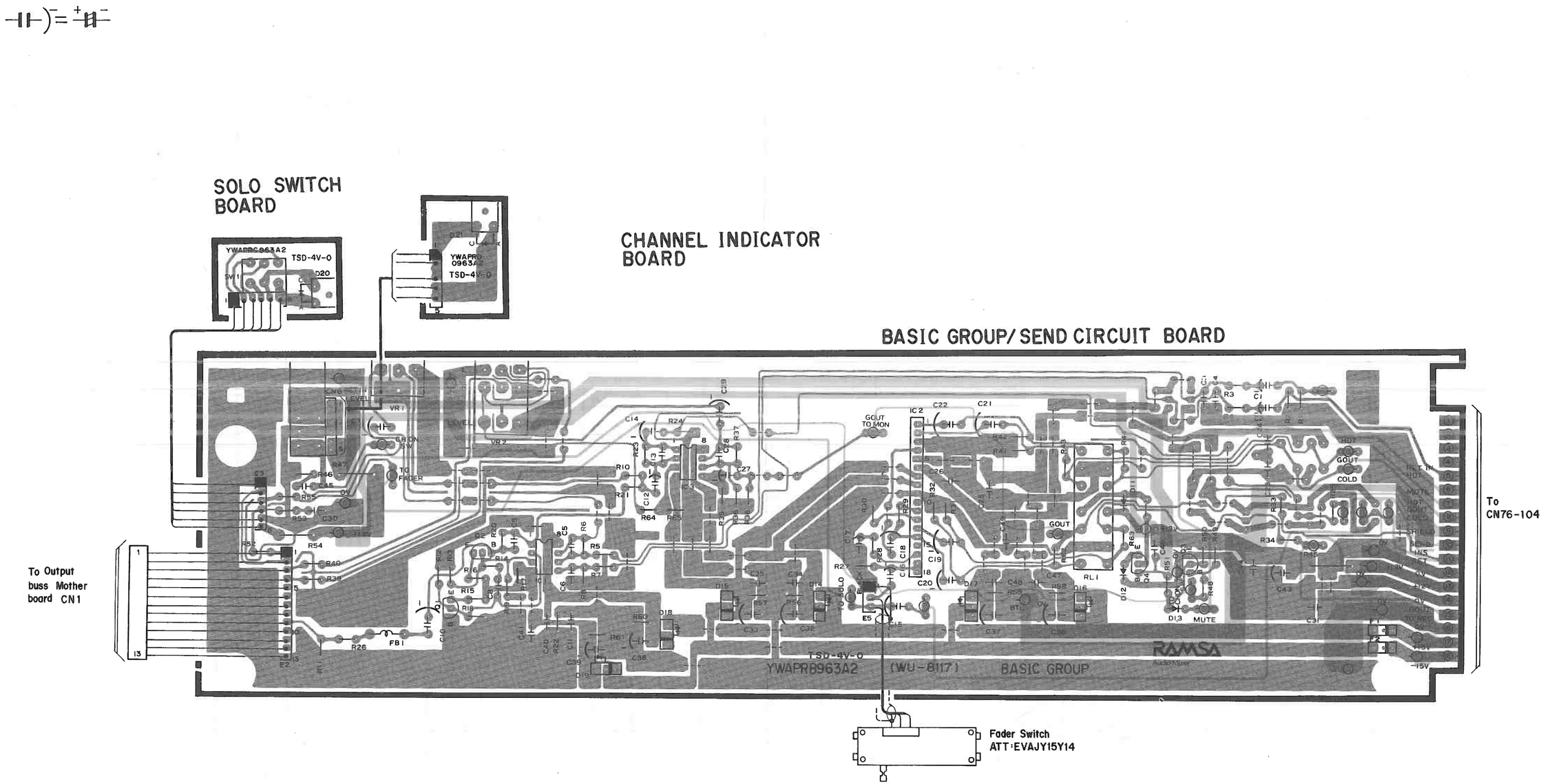

SCHEMATIC DIAGRAM OF WU-8117

BASIC GROUP / SEND CIRCUIT BOARD

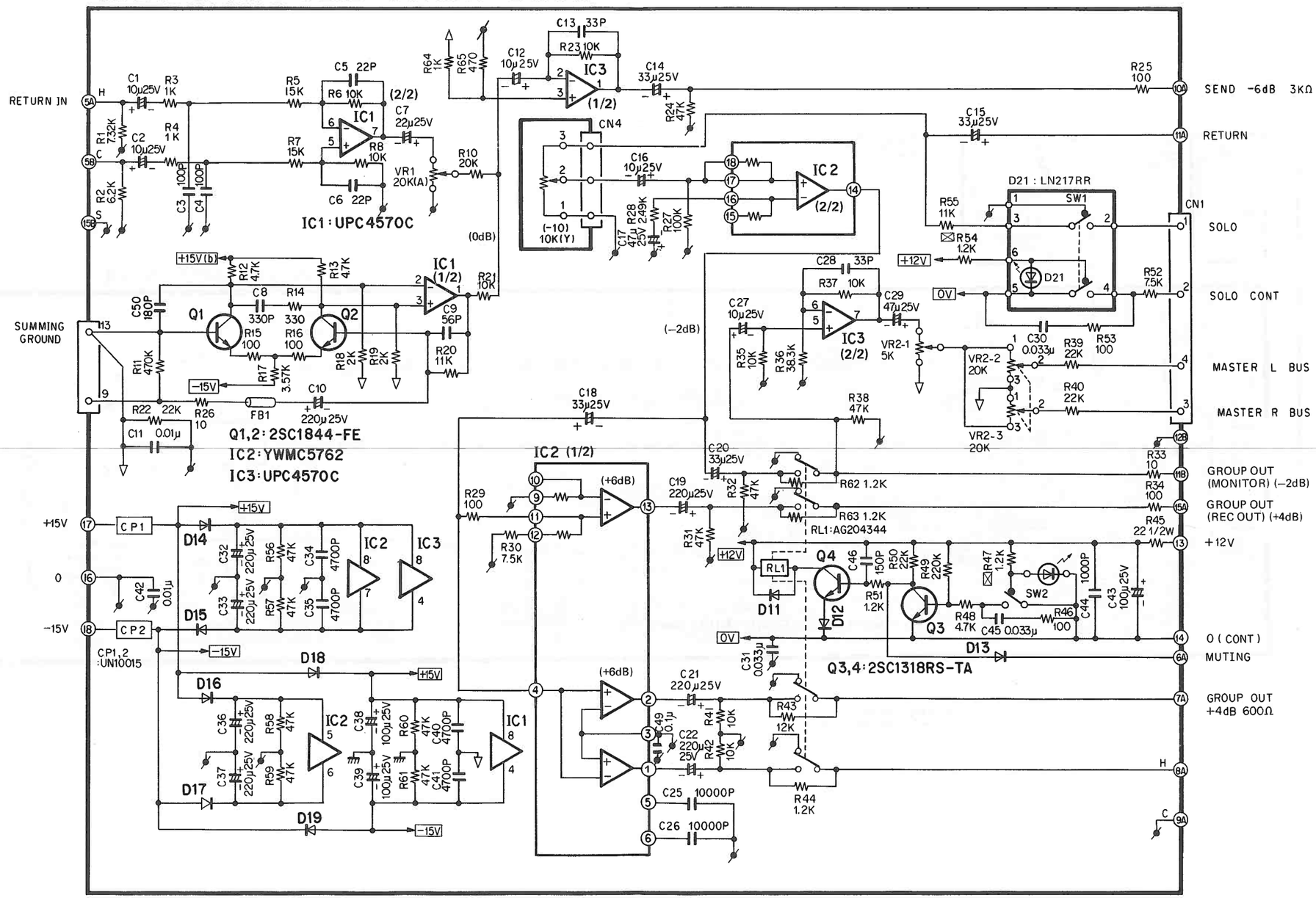

Notes :

1. All resistor values are in ohms 1/4W ±5% unless otherwise specified, Ⓟ .....±1%.
2. All capacitor values are in farads 50V unless otherwise specified.
3. The mark ⊗ shows fuse resistor.
4. The mark ◎ shows metal film.
5. The mark ▭ shows wirewound.
6. The mark ⊠ shows incombustible metal film.
7. The mark ▽ shows summing ground.
8. The mark ⚷ shows 0V.
9. The mark ⏚ shows chassis.
10. Do not order components by part NO. written on schematic diagram. Use replacement parts list.

CIRCUIT BOARD AND WIRING CONNECTION DIAGRAM OF WU-8118

– View from Components Side –

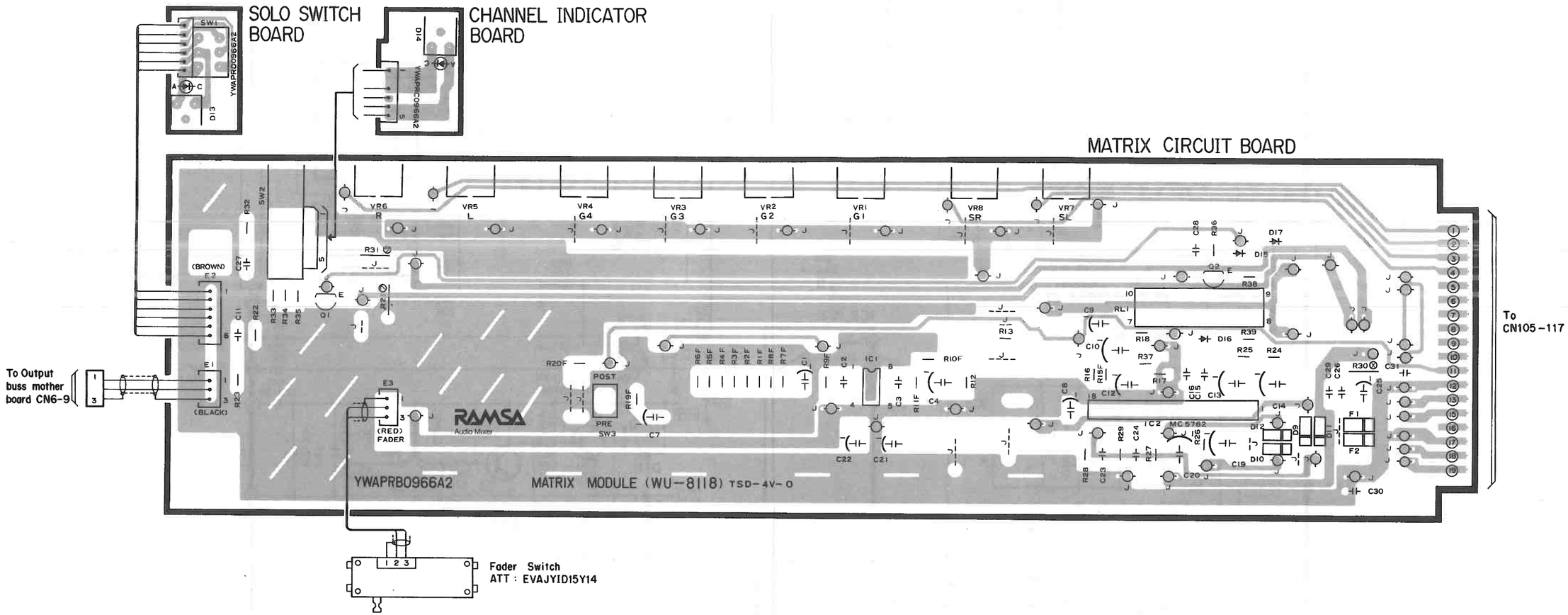

SCHEMATIC DIAGRAM OF WU-8118

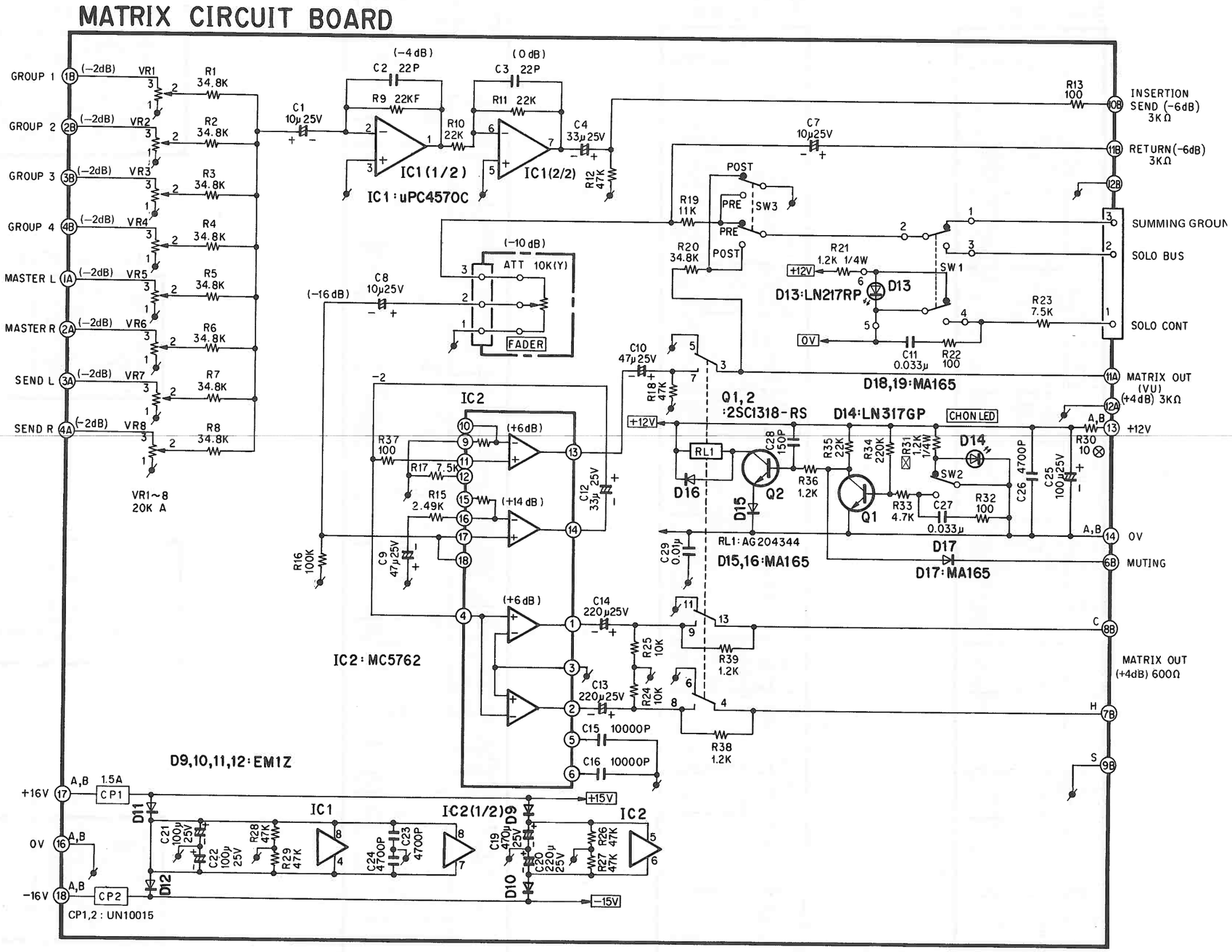

Notes :

1. All resistor values are in ohms 1/4W ±5% unless otherwise specified, ⊕ .....±1%.
2. All capacitor values are in farads 50V unless otherwise specified.
3. The mark ⊗ shows fuse resistor.
4. The mark ◎ shows metal film.
5. The mark ▭ shows wirewound.
6. The mark ⊠ shows incombustible metal film.
7. The mark ▽ shows summing ground.
8. The mark ⚷ shows 0V.
9. The mark ⏚ shows chassis.
10. Do not order components by part NO. written on schematic diagram. Use replacement parts list.

CIRCUIT BOARD AND WIRING CONNECTION DIAGRAM OF WR-8428

– View from Components Side –

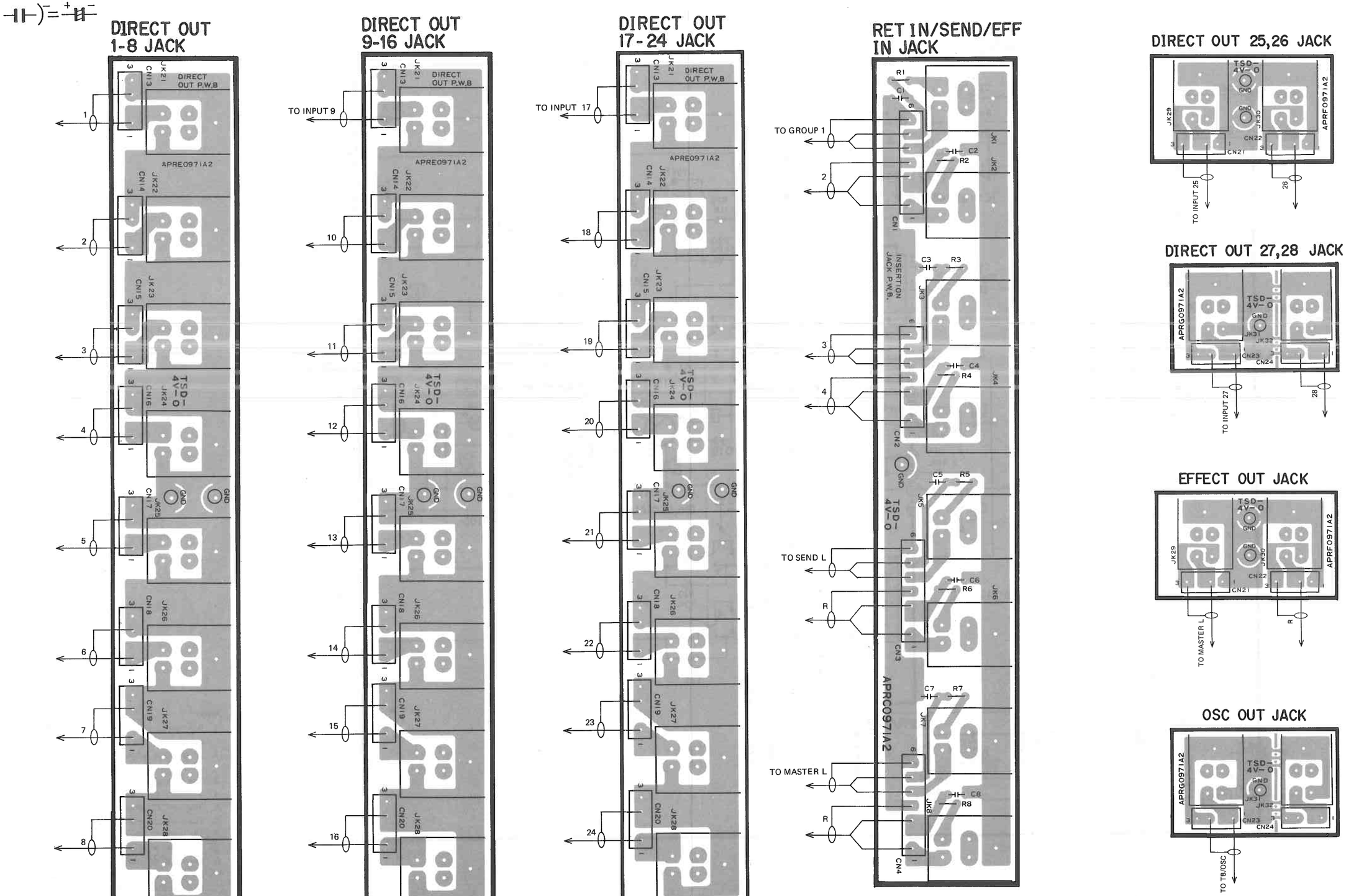

SCHEMATIC DIAGRAM OF WR-8428

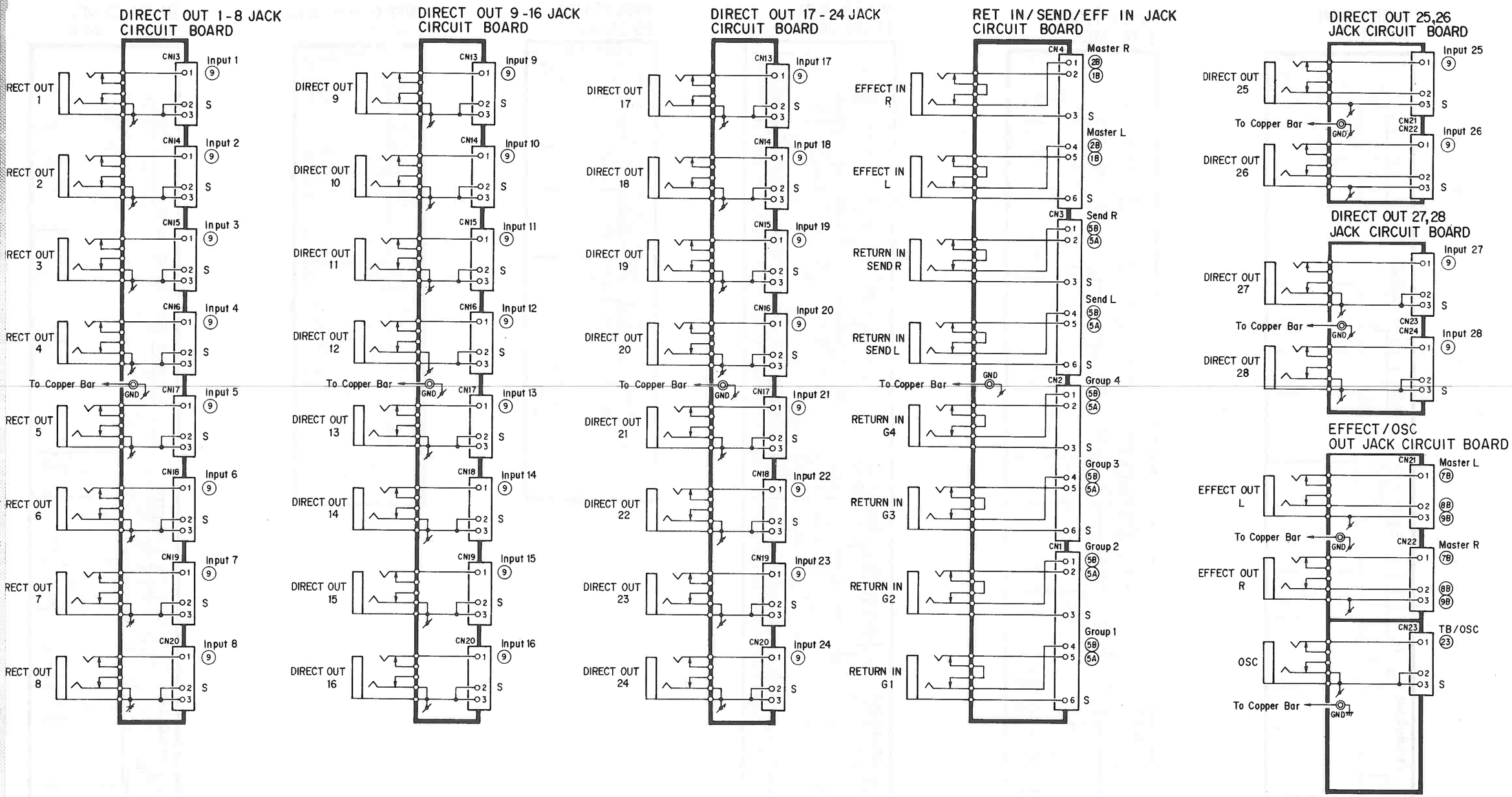

CIRCUIT BOARD AND WIRING CONNECTION DIAGRAM OF WR-8428

– View from Components Side –

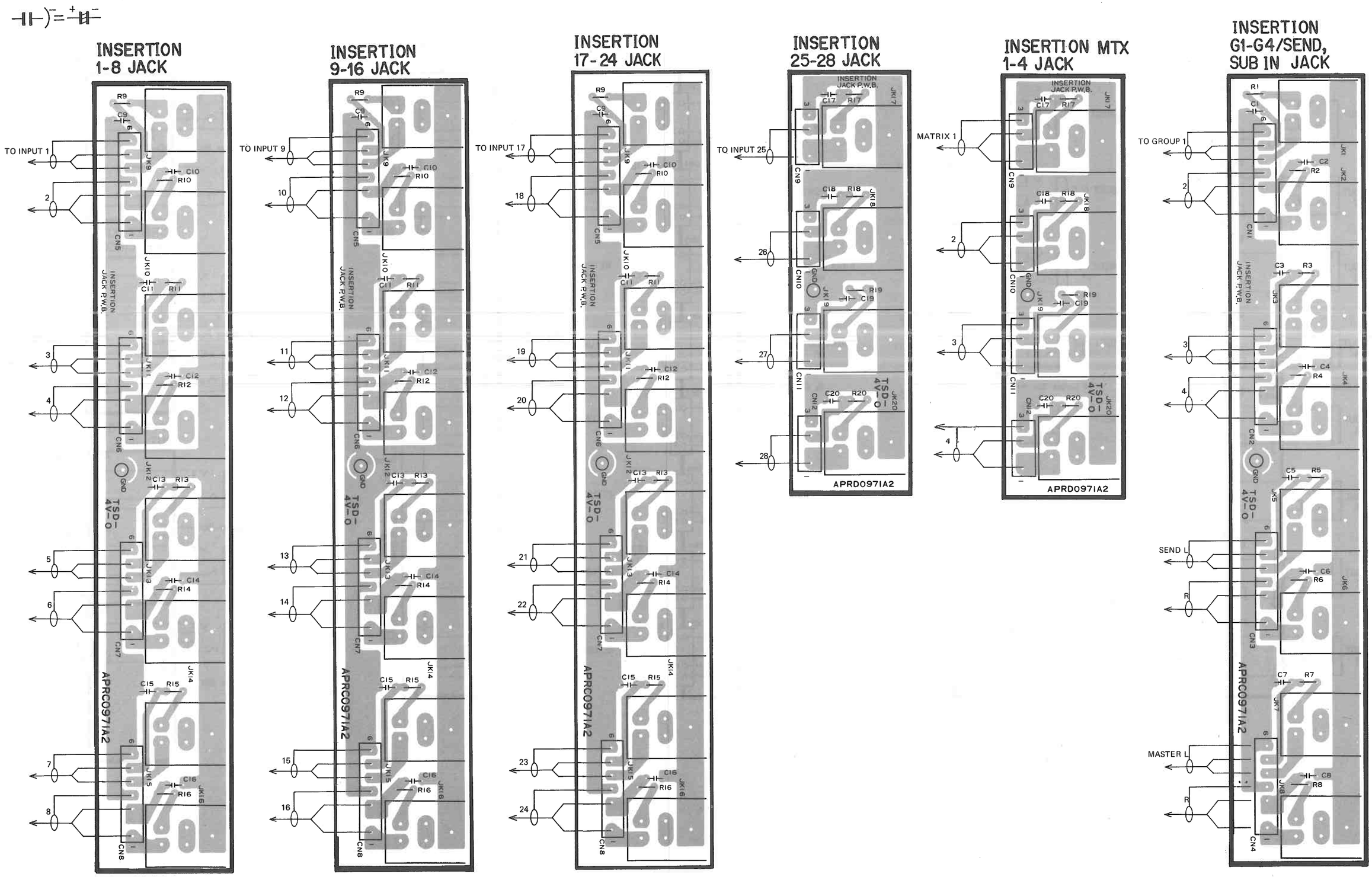

SCHEMATIC DIAGRAM OF WR-8428

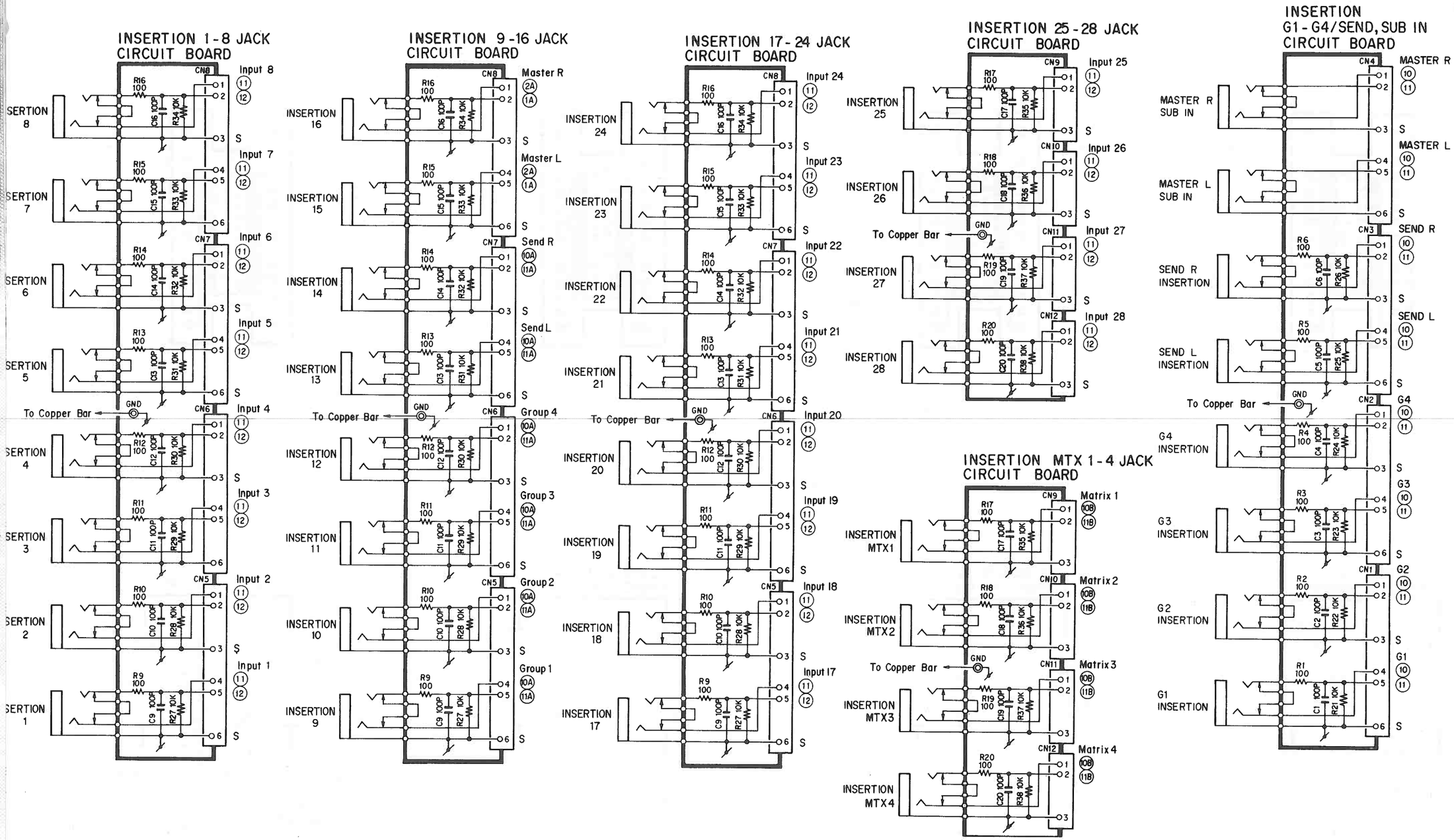

CIRCUIT BOARD AND WIRING CONNECTION DIAGRAM AND SCHEMATIC DIAGRAM OF WR-8428

– View from Components Side –

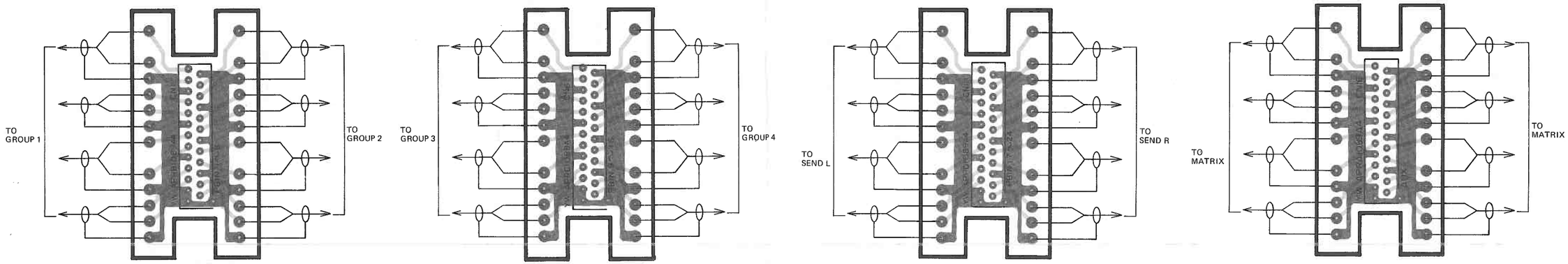

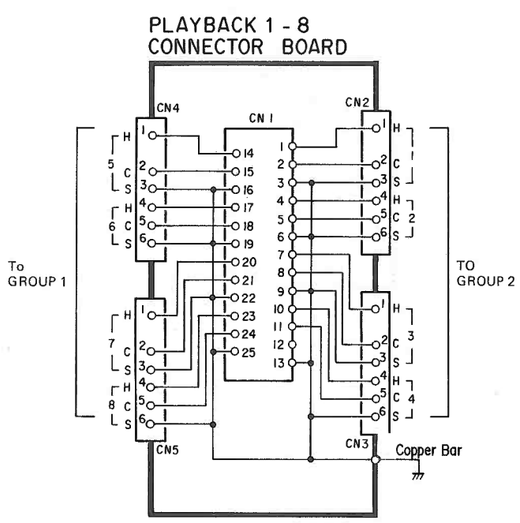

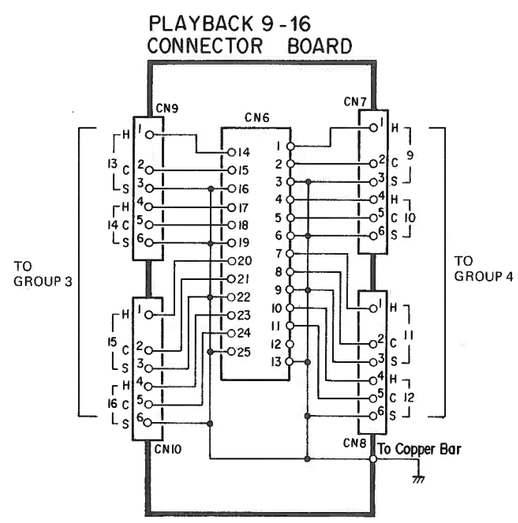

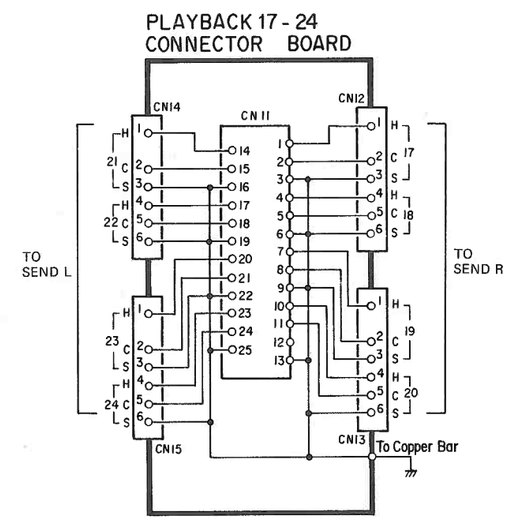

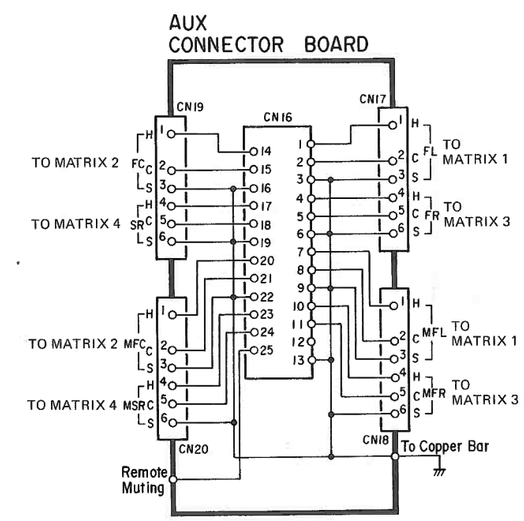

CIRCUIT BOARD AND WIRING CONNECTION DIAGRAM AND SCHEMATIC DIAGRAM OF WR-8428

– View from Components Side –

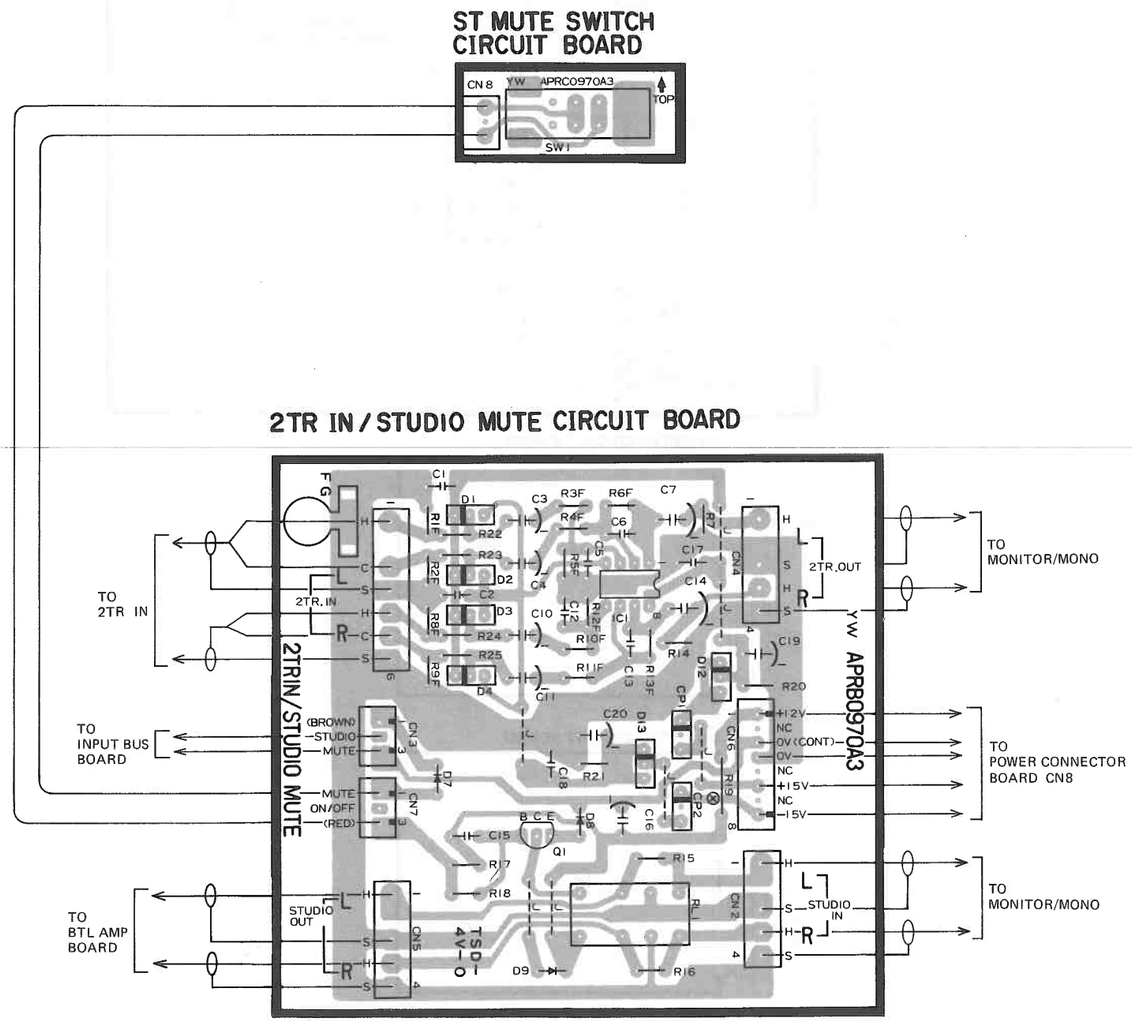

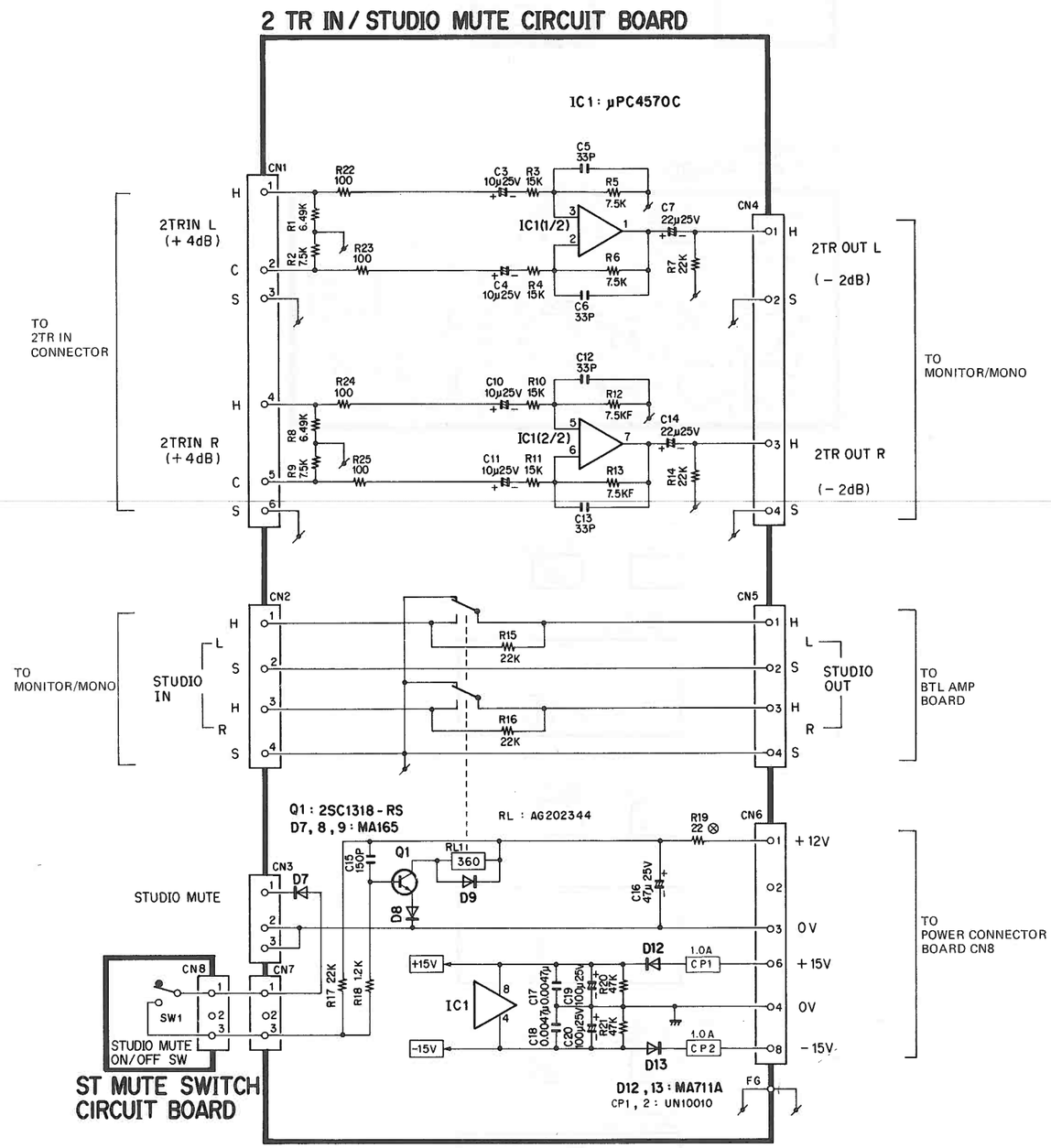

CIRCUIT BOARD AND WIRING CONNECTION DIAGRAM OF WR-8428

– View from Components Side –

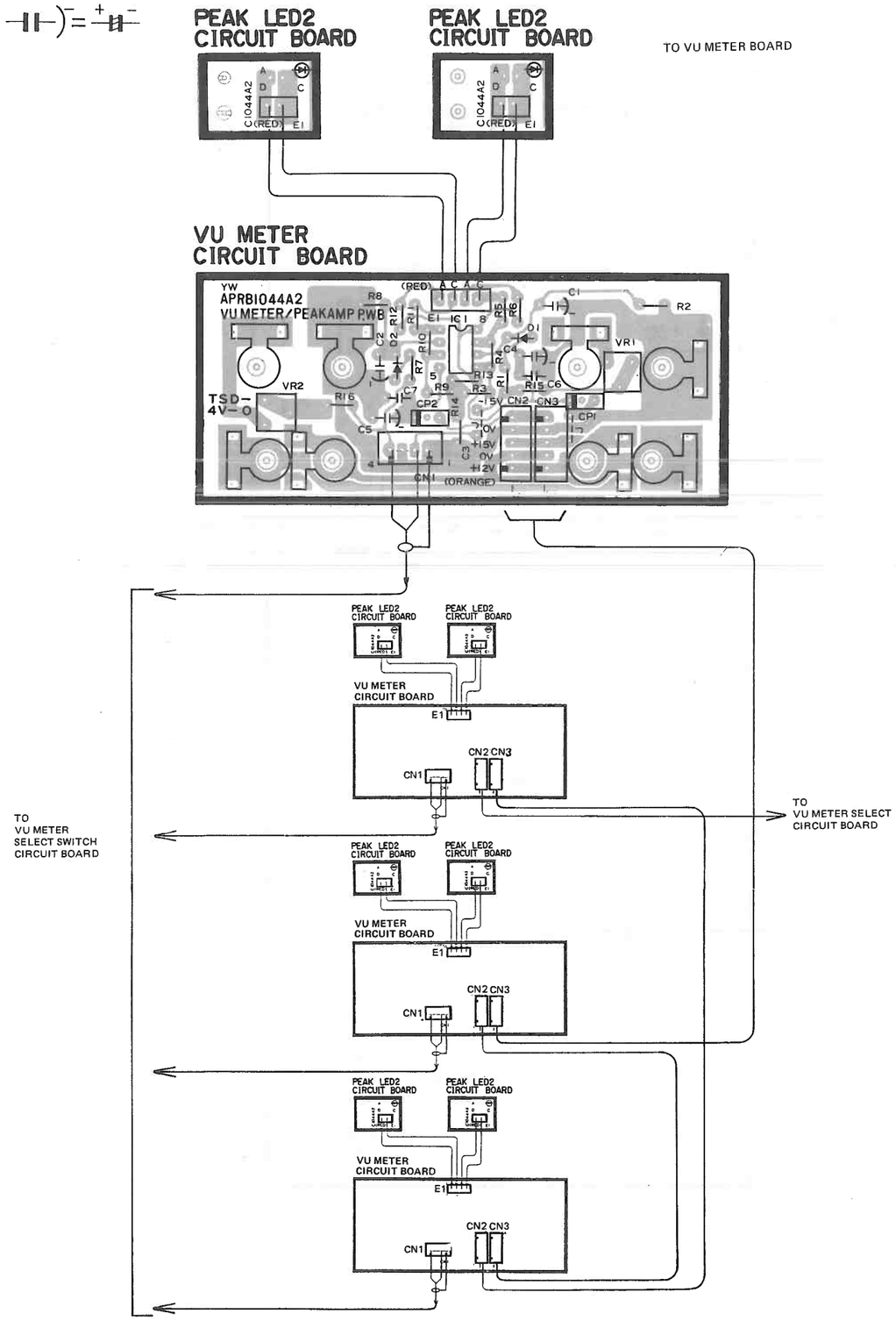

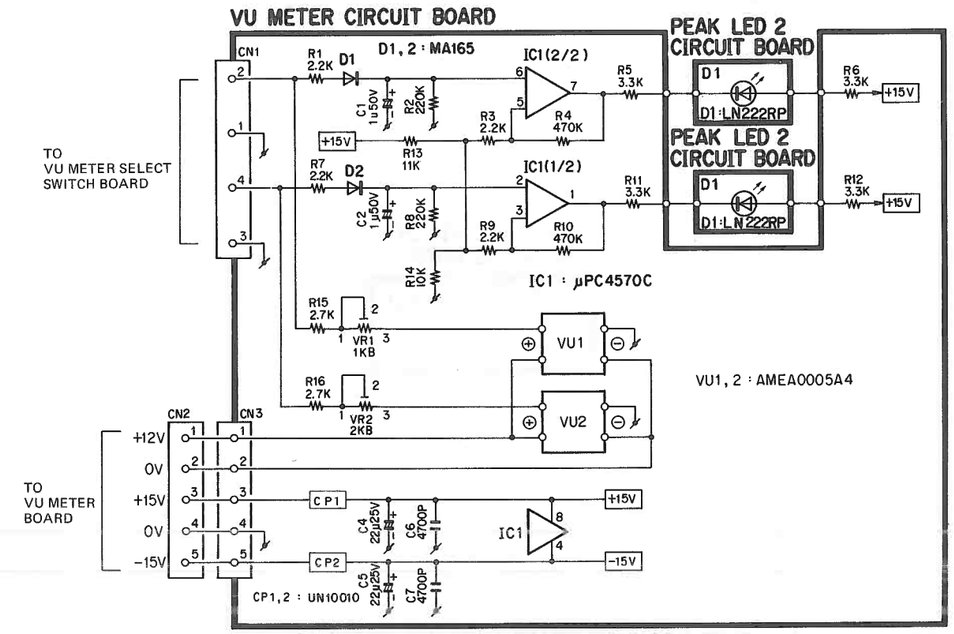

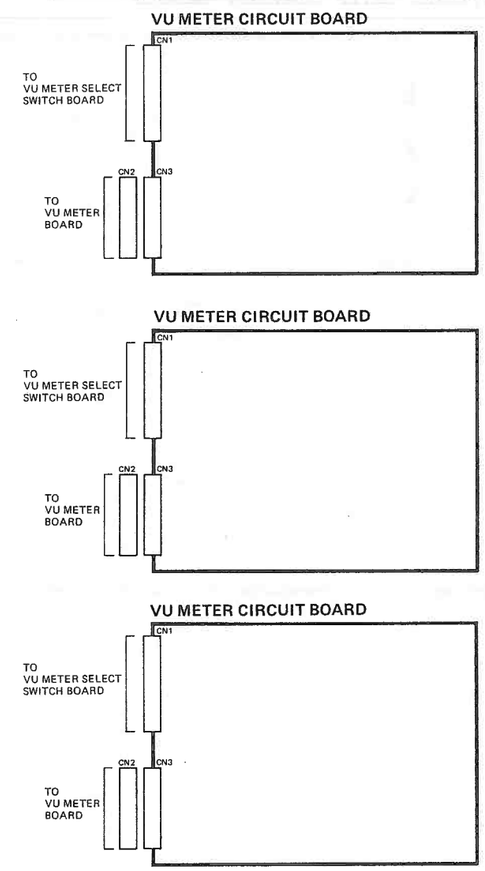

CIRCUIT BOARD AND WIRING CONNECTION DIAGRAM OF WR-8428

– View from Components Side –

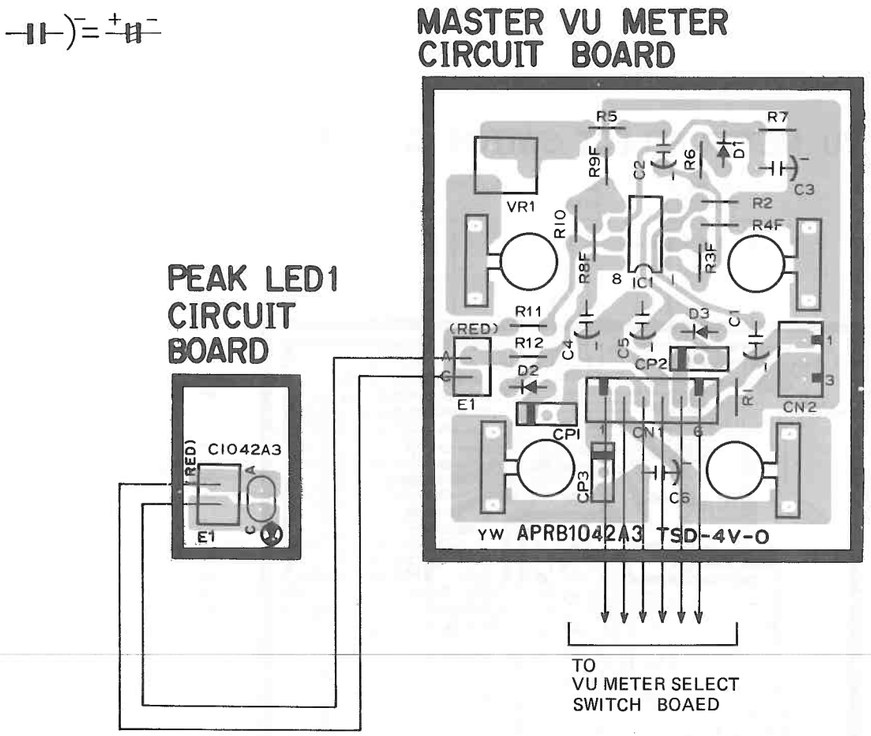

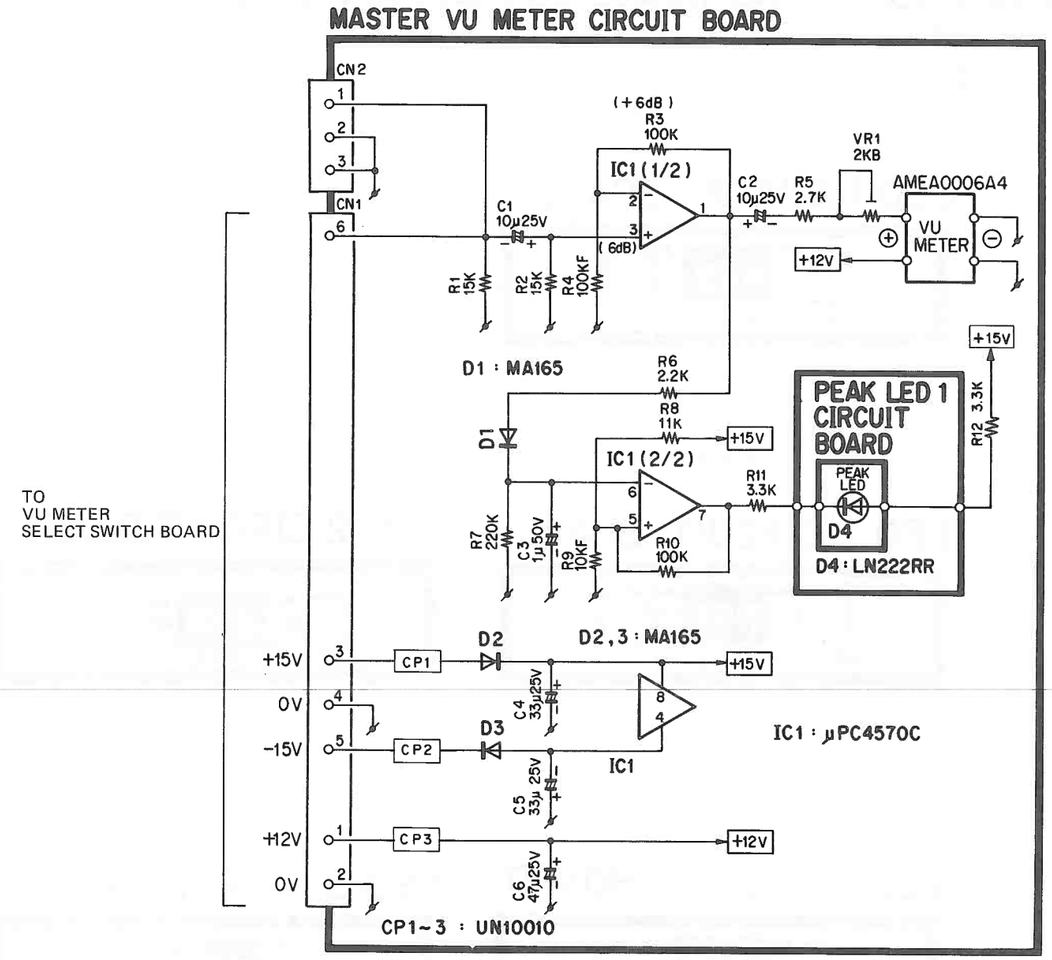

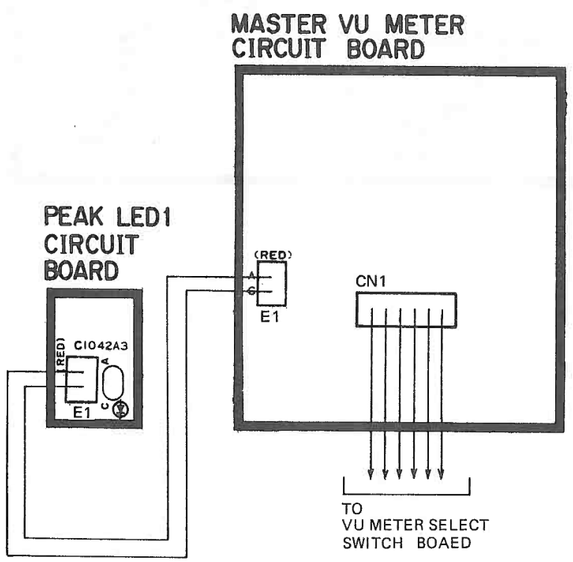

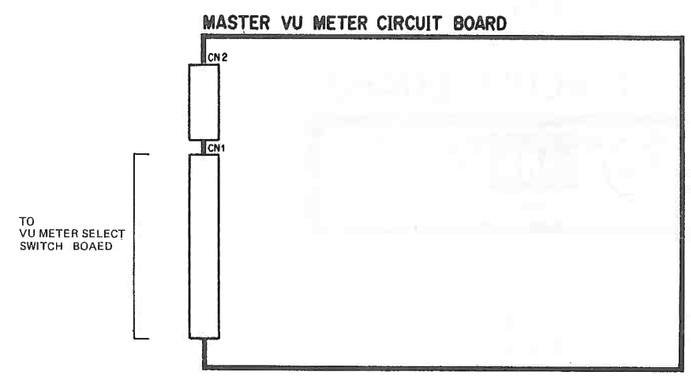

CIRCUIT BOARD AND WIRING CONNECTION DIAGRAM OF WR-8428

– View from Components Side –

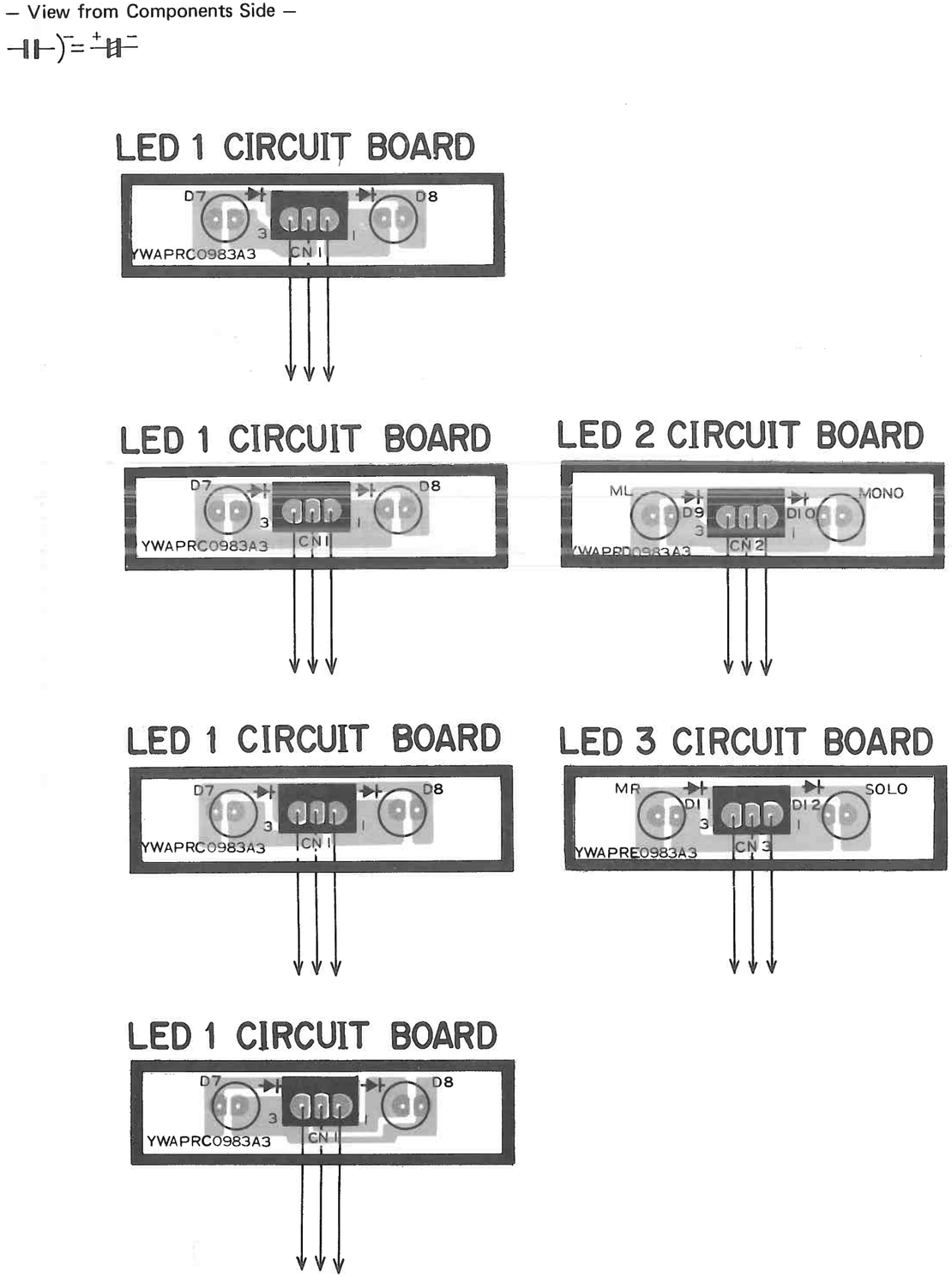

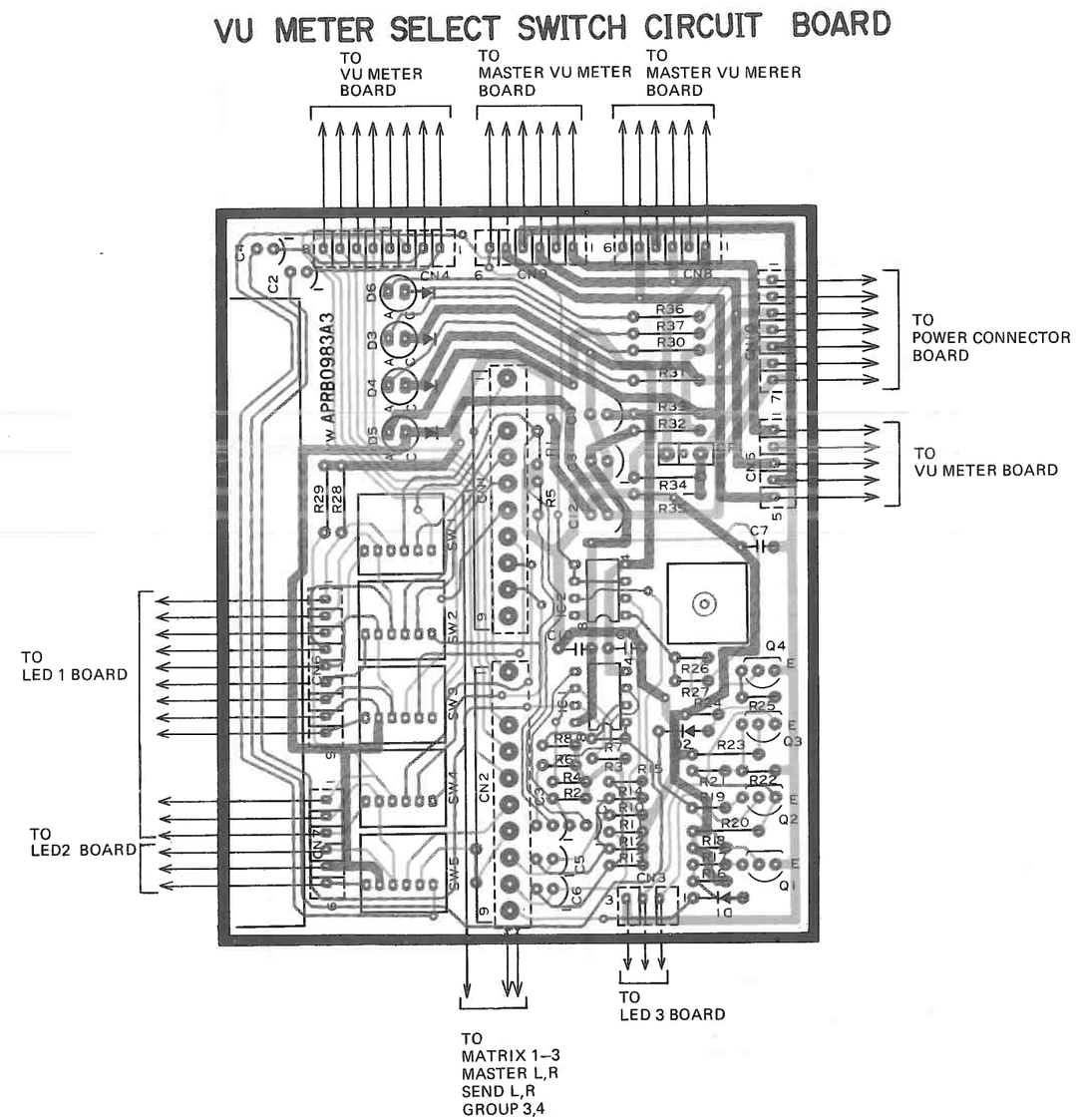

SCHEMATIC DIAGRAM OF WR-8428

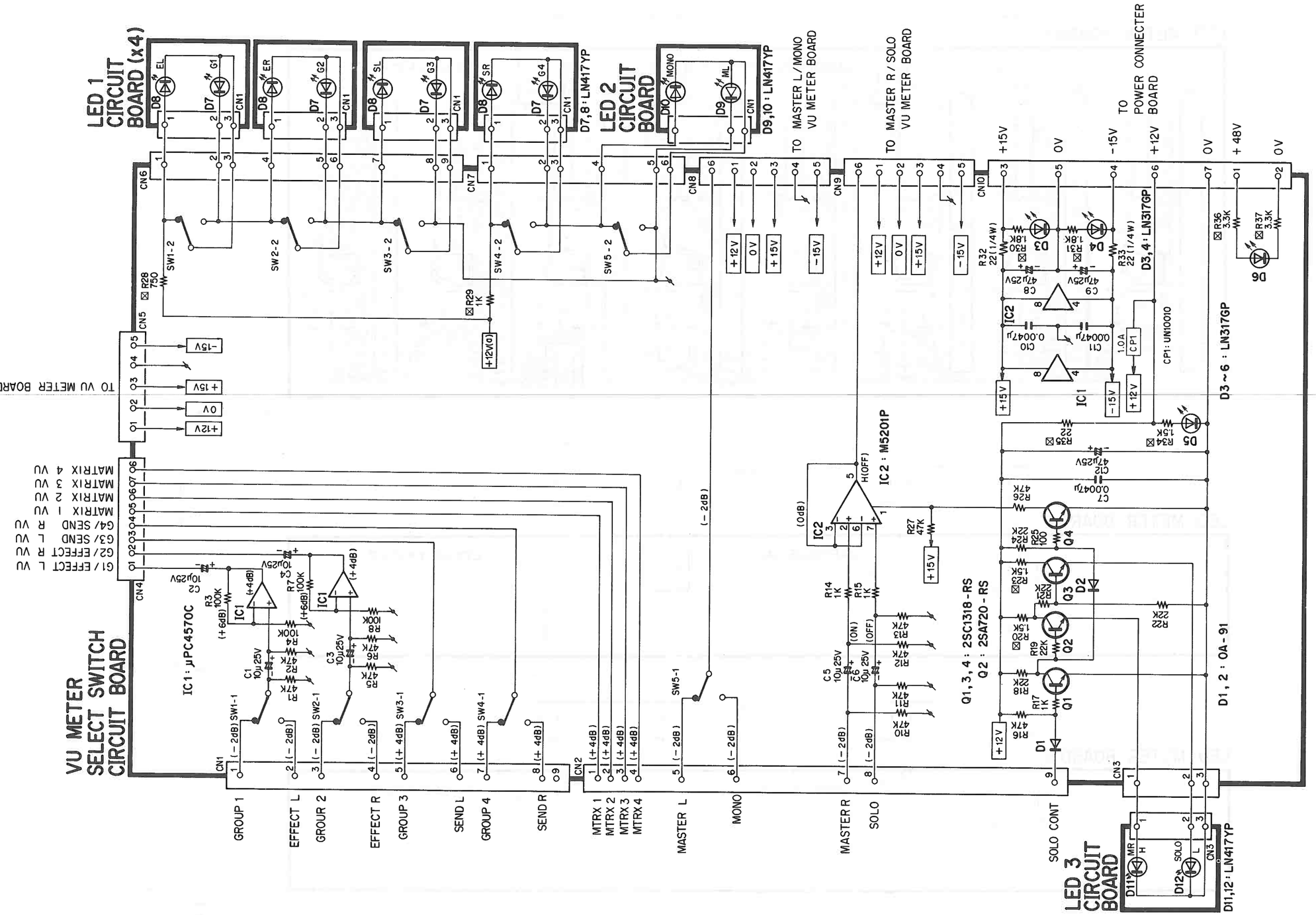

CIRCUIT BOARD AND WIRING CONNECTION DIAGRAM OF WR-8428

– View from Components Side –

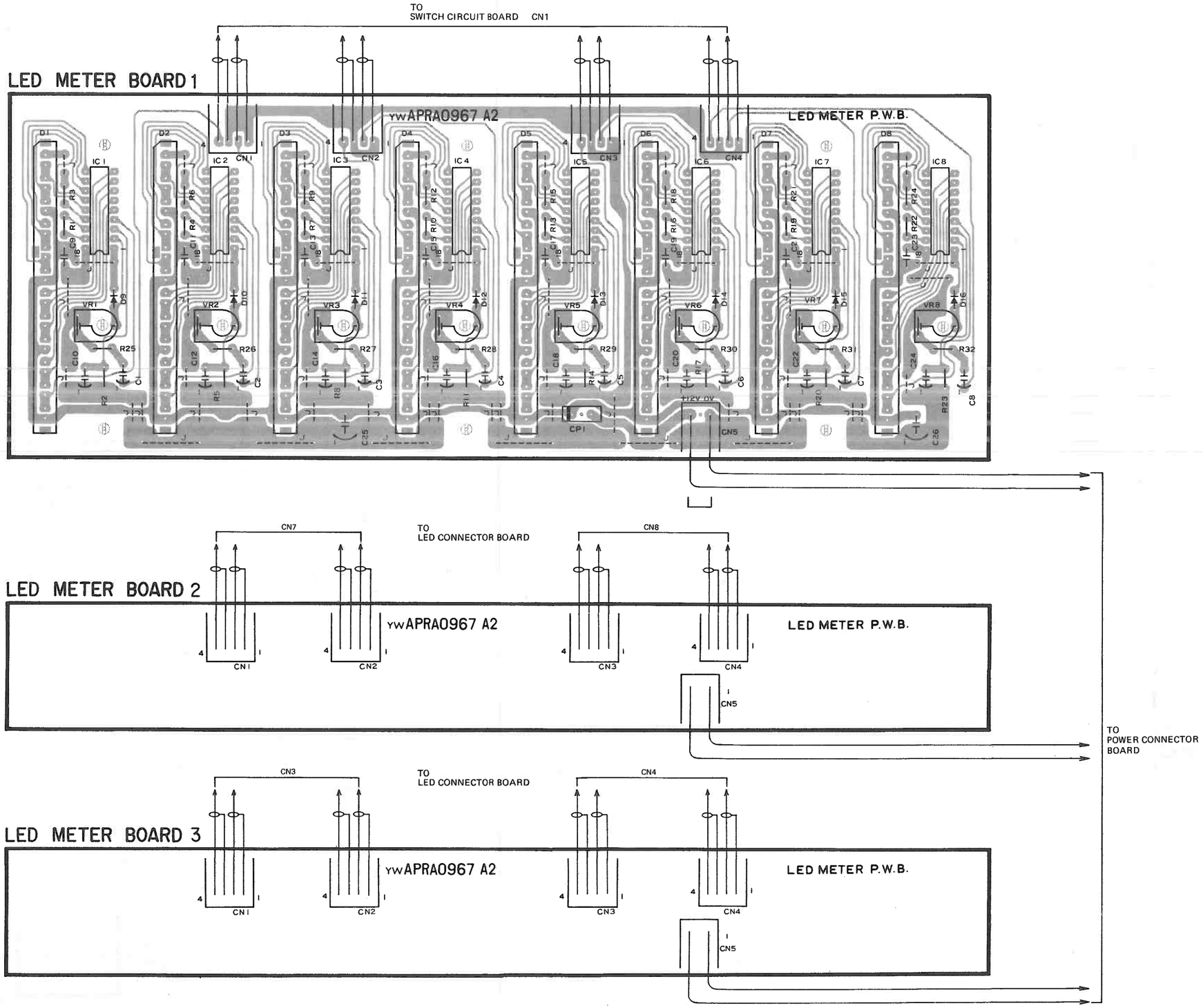

SCHEMATIC DIAGRAM OF WR-8428

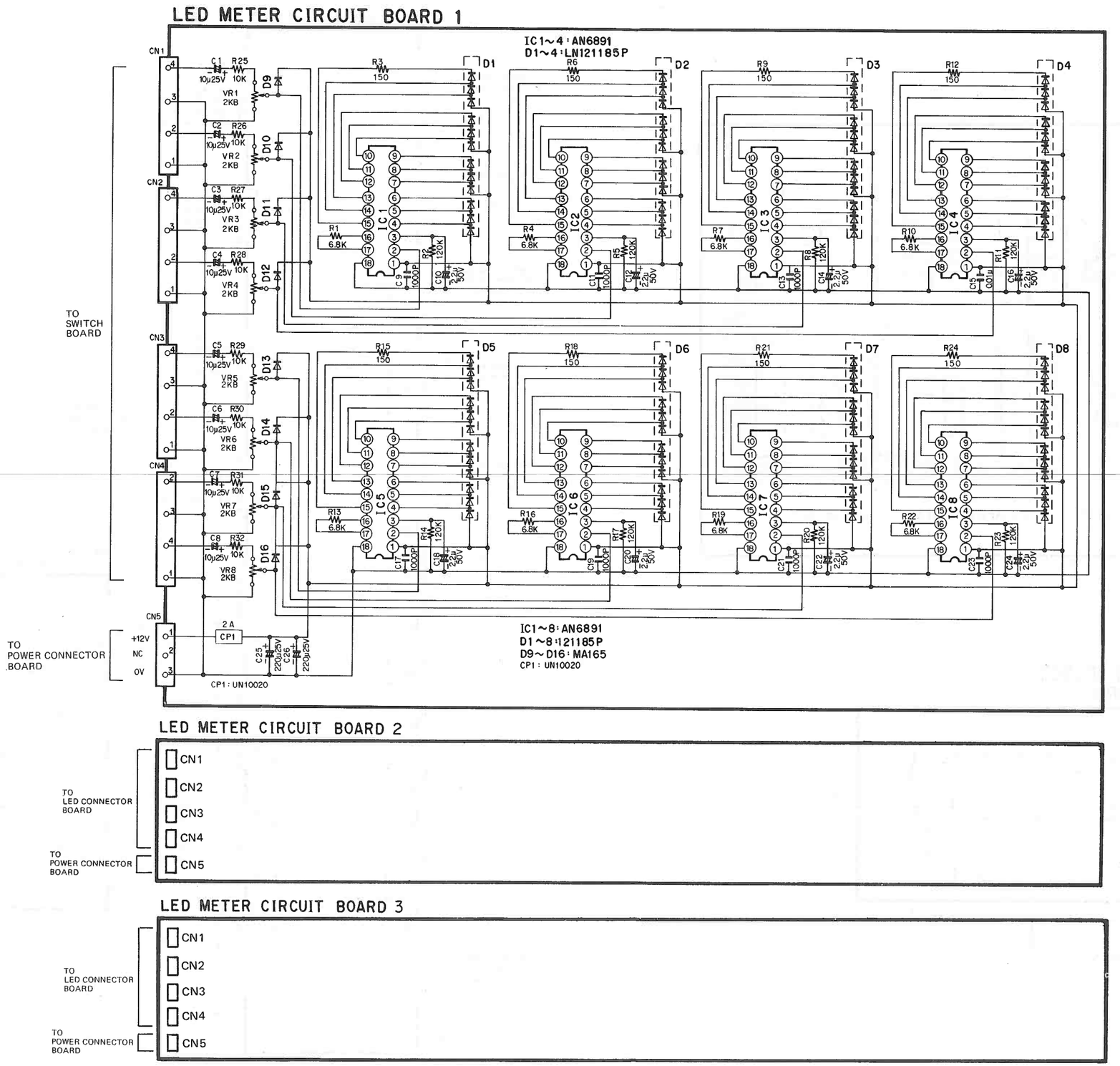

CIRCUIT BOARD AND WIRING CONNECTION DIAGRAM OF WR-8428

– View from Components Side –

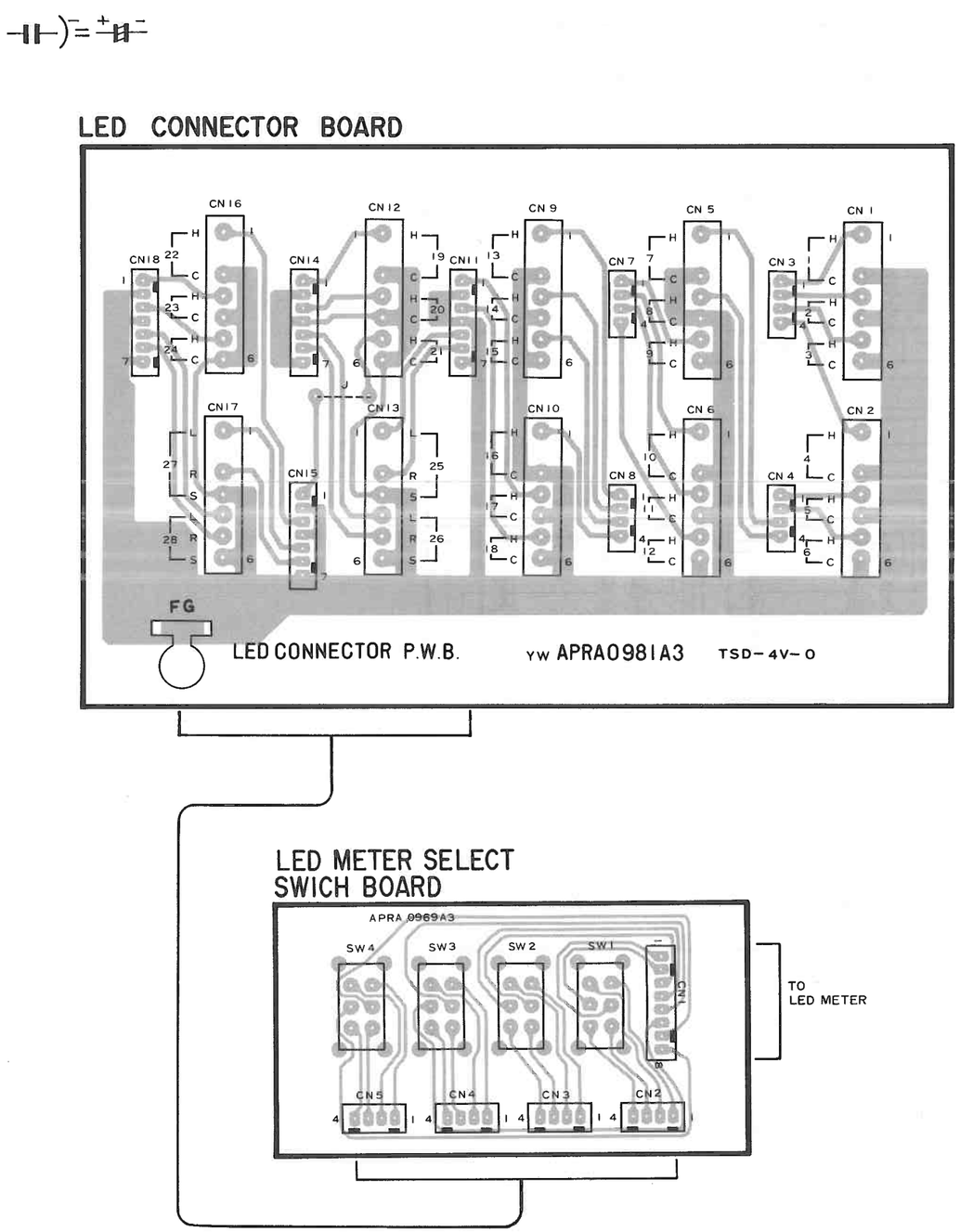

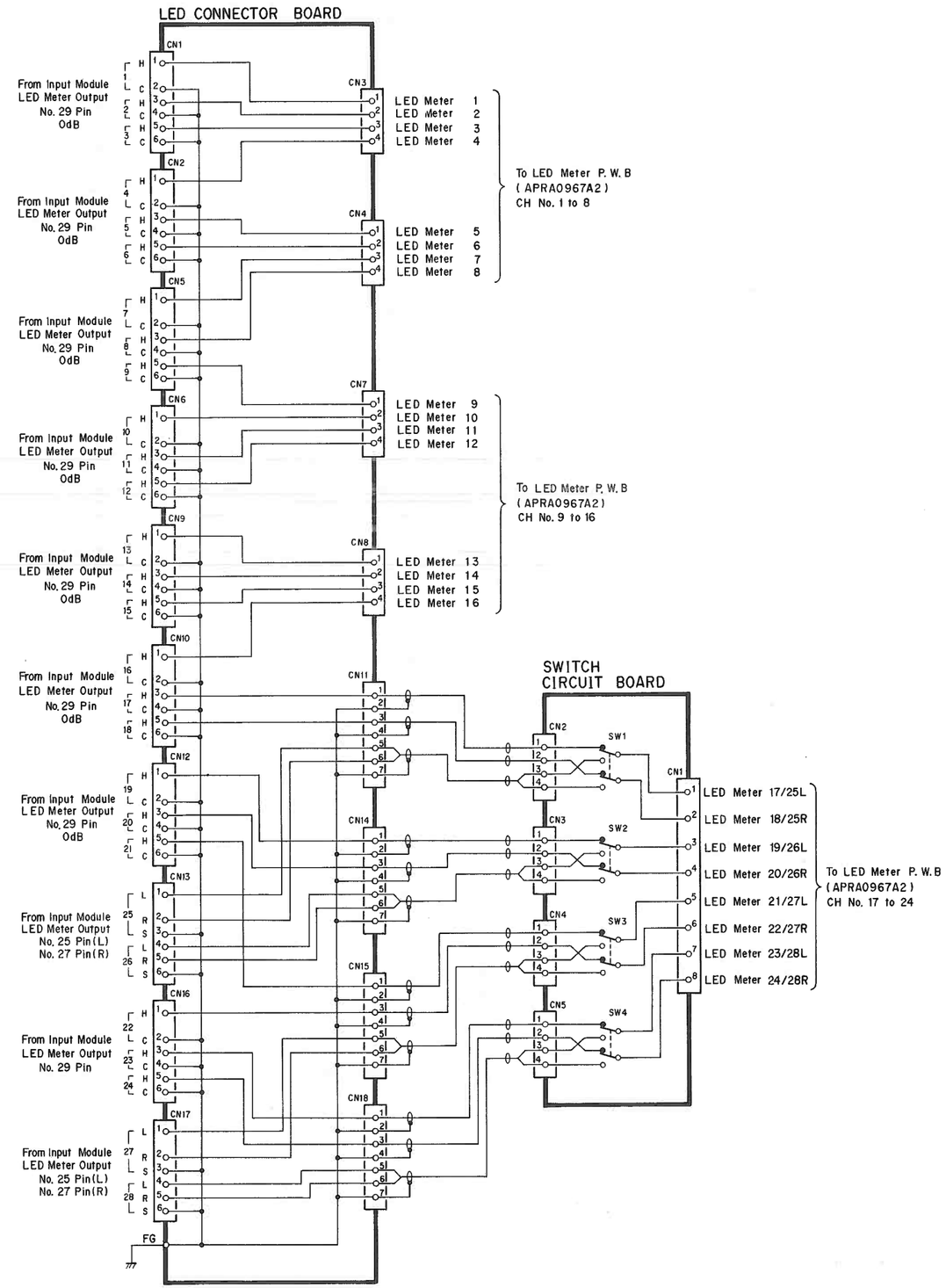

CIRCUIT BOARD AND WIRING CONNECTION DIAGRAM OF WR-8428

– View from Components Side –

POWER CONNECTOR BOARD

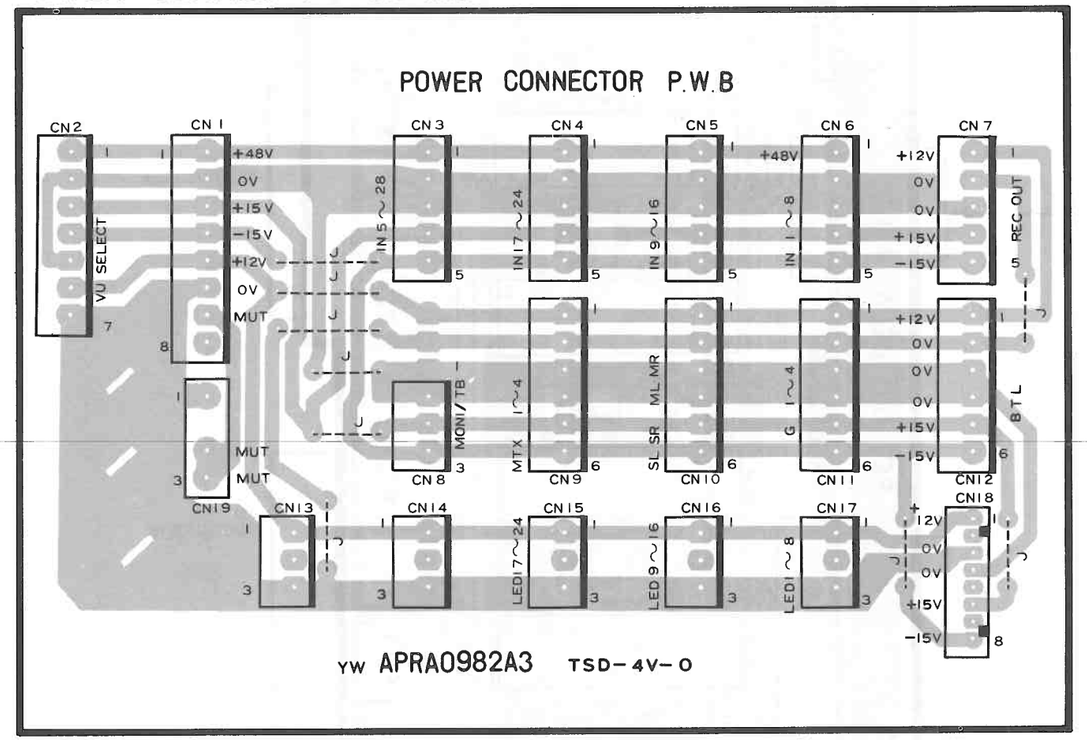

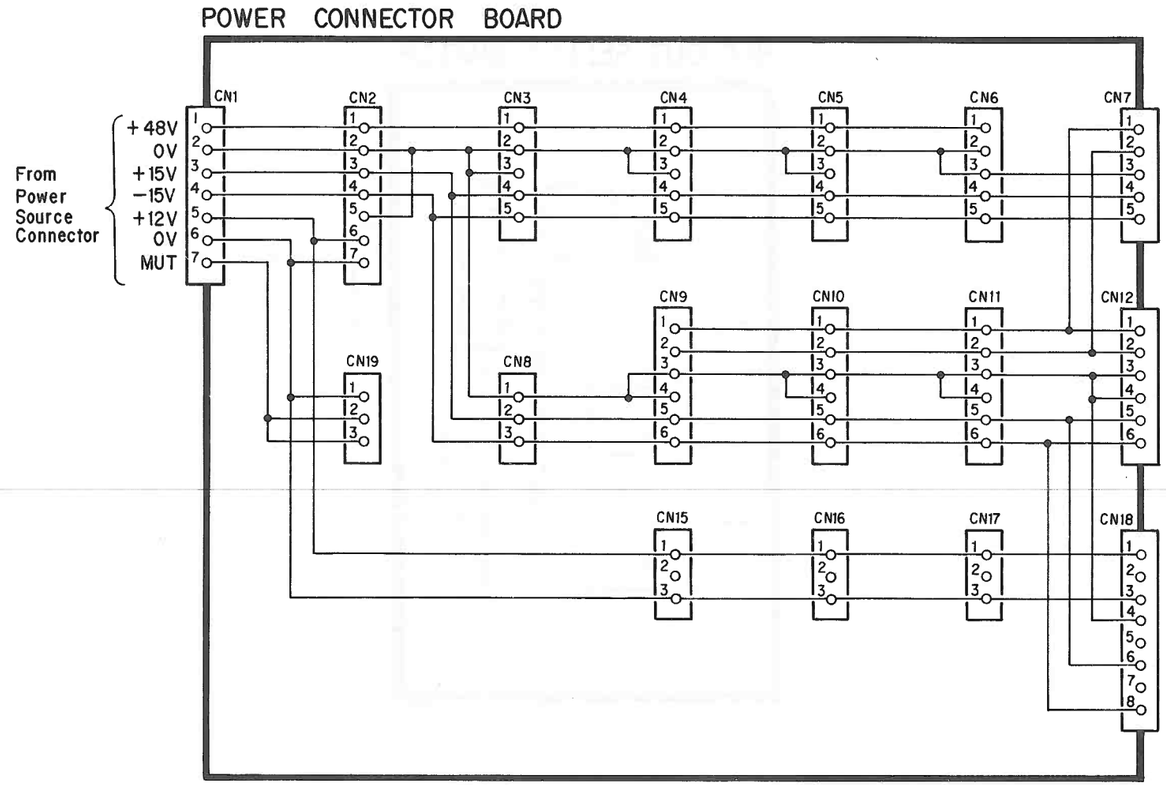

CN2	To VU Select Switch Circuit Board
CN3	To Input Bus Mother Board
CN4	To Input Bus Mother Board
CN5	To Input Bus Mother Board
CN6	To Input Bus Mother Board
CN7	To Rec Out Select Switch Circuit Board
CN8	To Monitor · Mono
CN9	To Matrix 1 to 4
CN10	To Send L, R Master L, R
CN11	To Group 1 to 4
CN12	To BTL Amplifire Circuit Board
CN15	To LED Meter Circuit Board
CN16	To LED Meter Circuit Board
CN17	To LED Meter Circuit Board
CN18	To 2 TR IN / Studio Mute Circuit Board
CN19	To BTL Amplifire Circuit Board and Matrix 4

CIRCUIT BOARD AND WIRING CONNECTION DIAGRAM OF WR-8428

– View from Components Side –

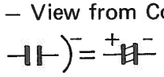

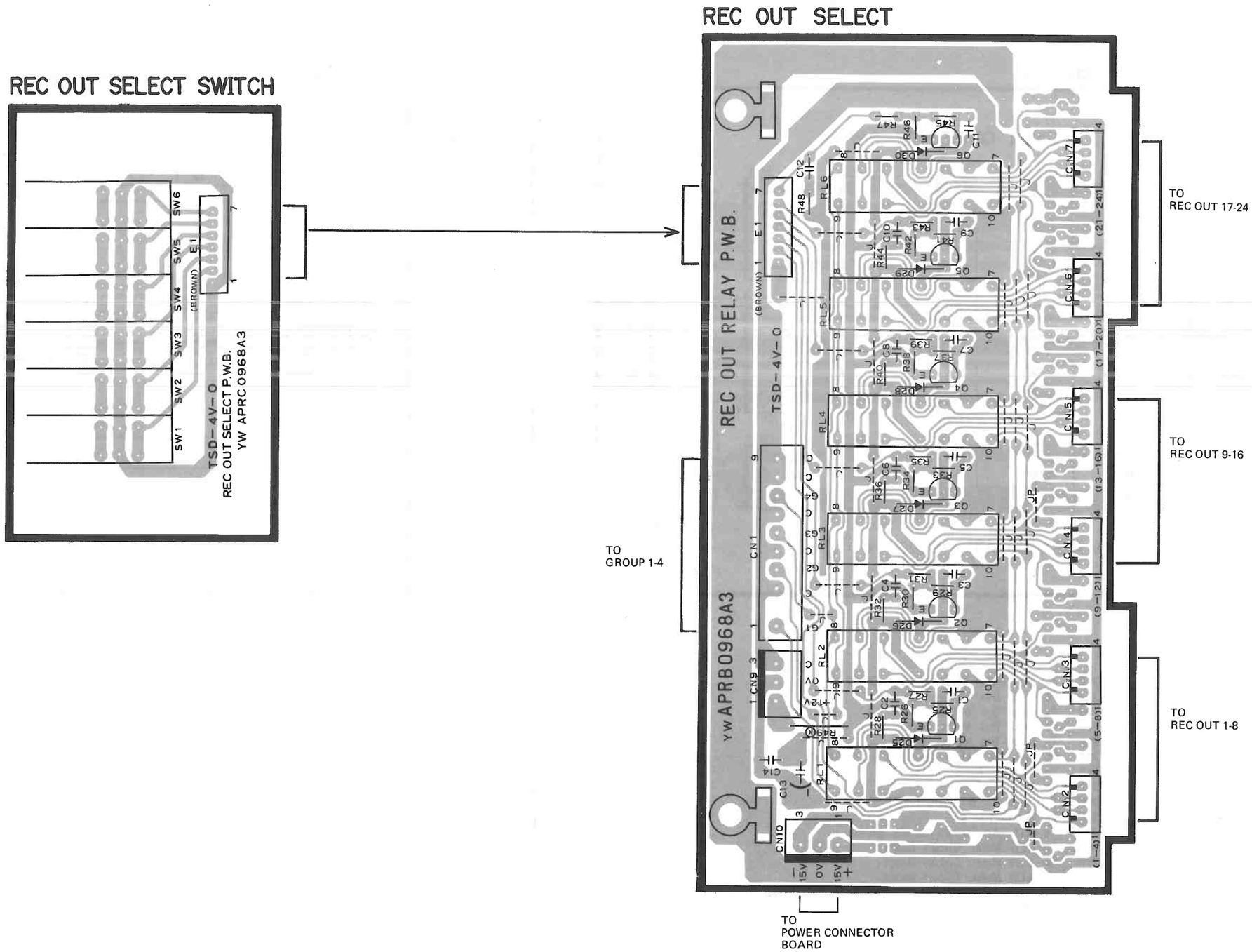

SCHEMATIC DIAGRAM OF WR-8428

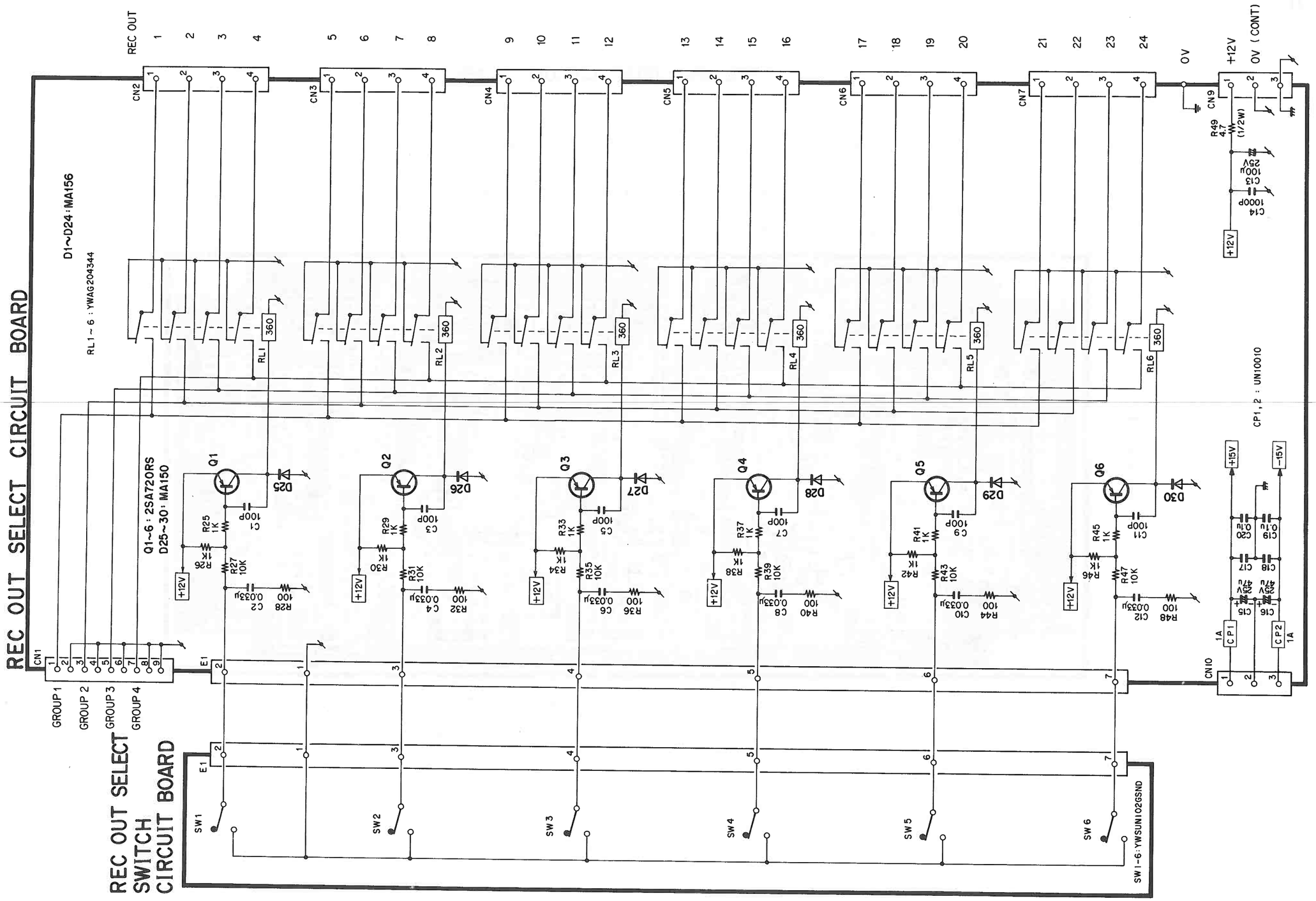

CIRCUIT BOARD AND WIRING CONNECTION DIAGRAM OF WR-8428

– View from Components Side –

BTL AMPLIFIRE CIRCUIT BOARD

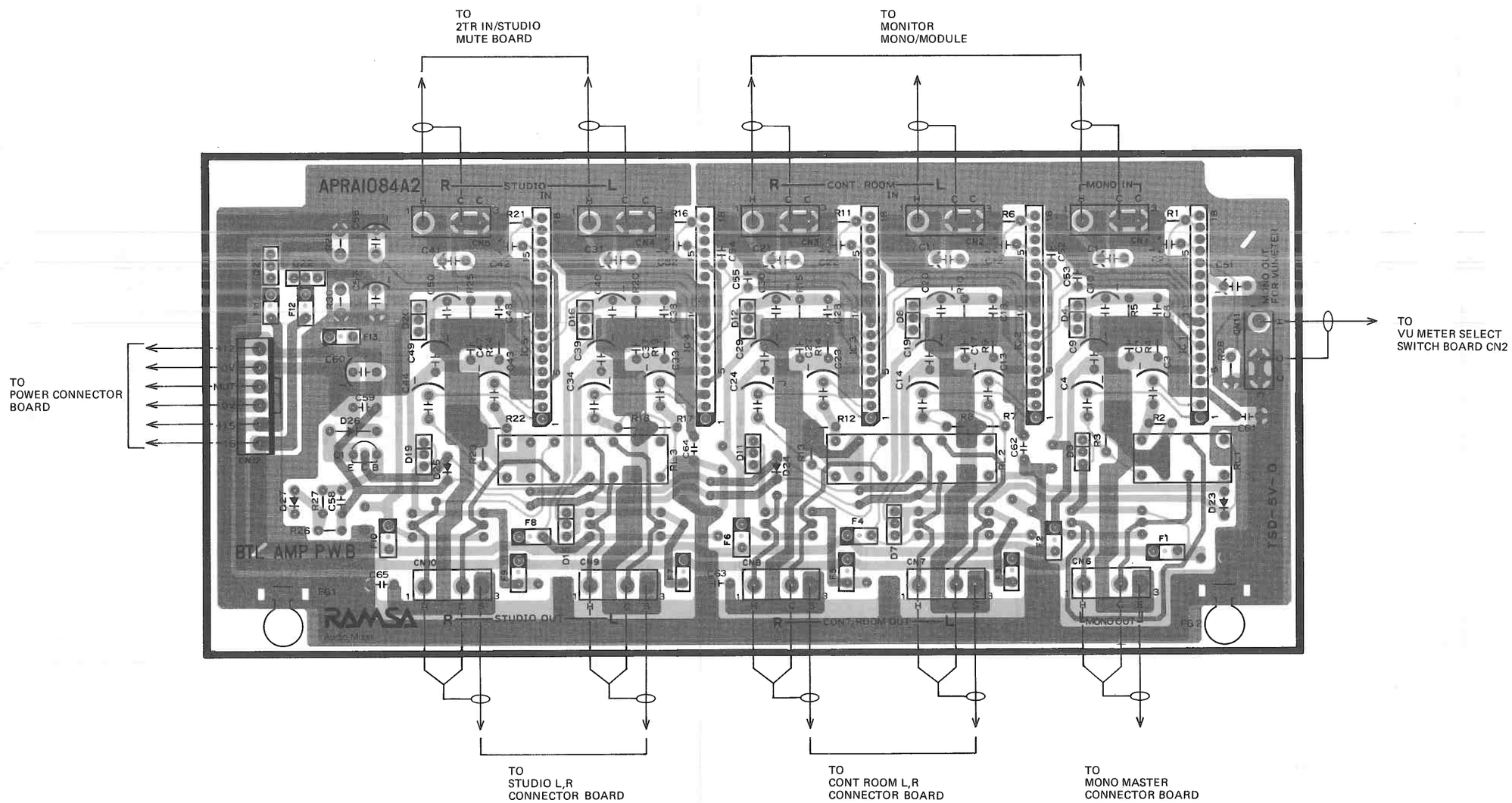

SCHEMATIC DIAGRAM OF WR-8428

BTL AMPLIFIRE CIRCUIT BOARD

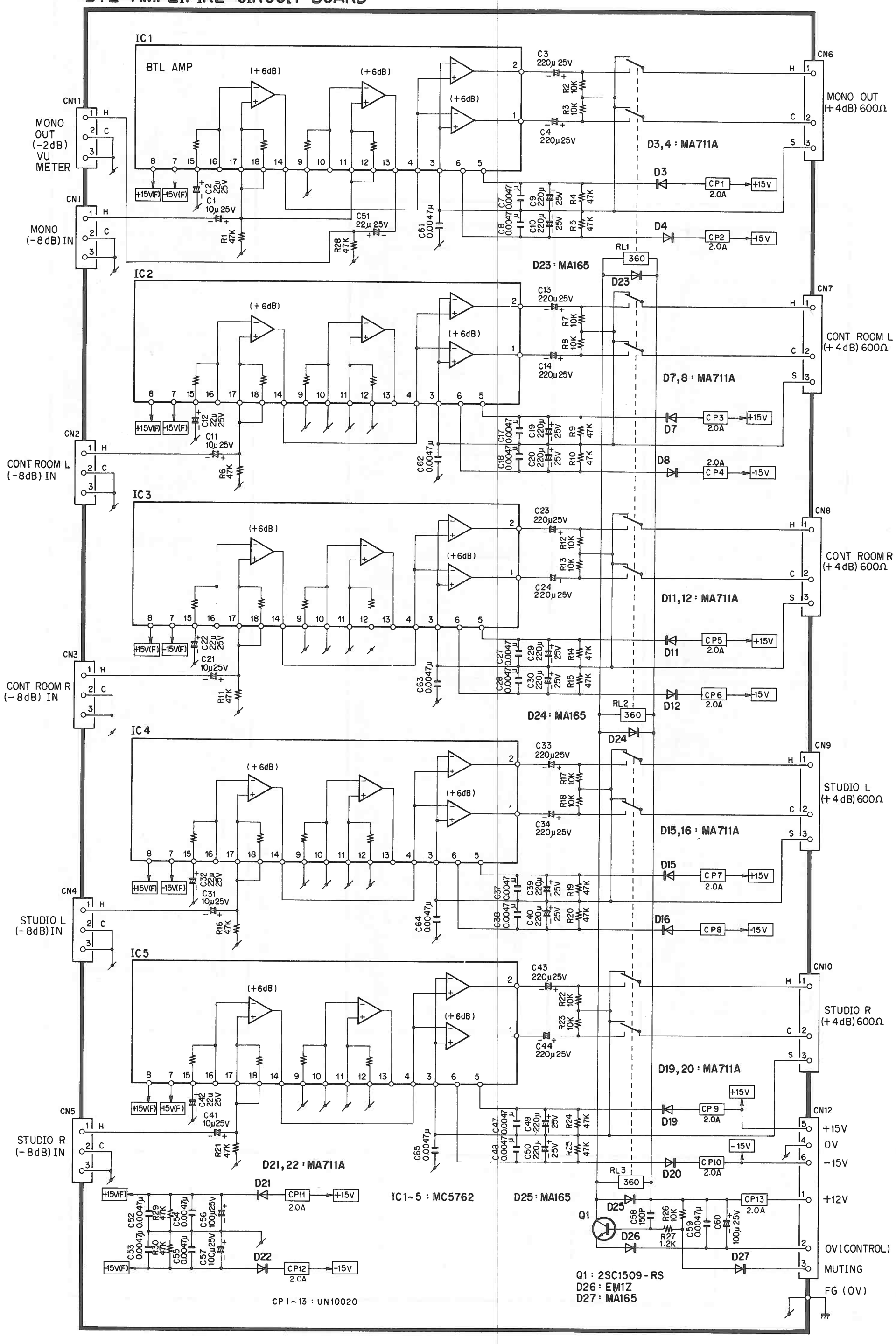

CIRCUIT BOARD AND WIRING CONNECTION DIAGRAM OF WR-8428

– View from Components Side –

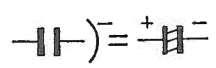

REMOTE CONTROL CIRCUIT BOARD

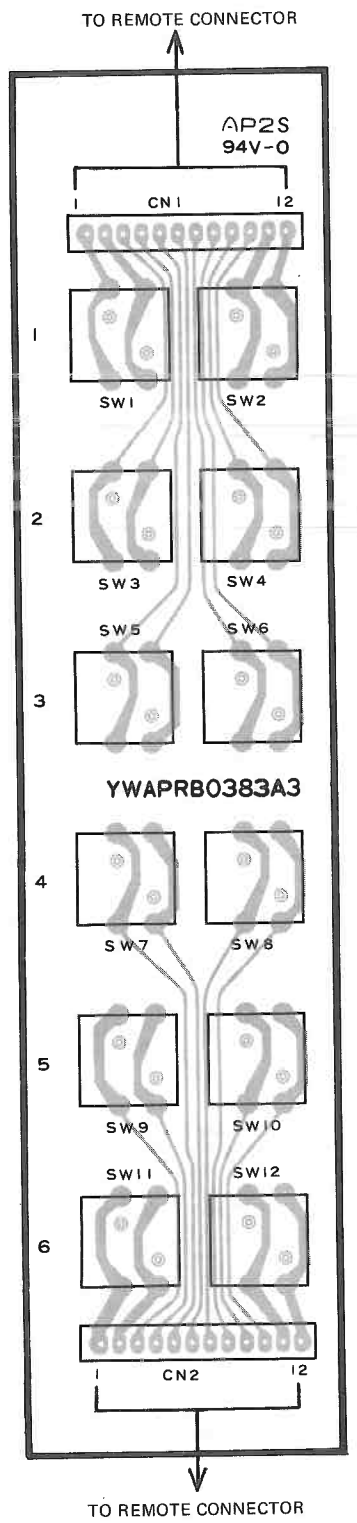

GROUP BUS MOTHER BOARD

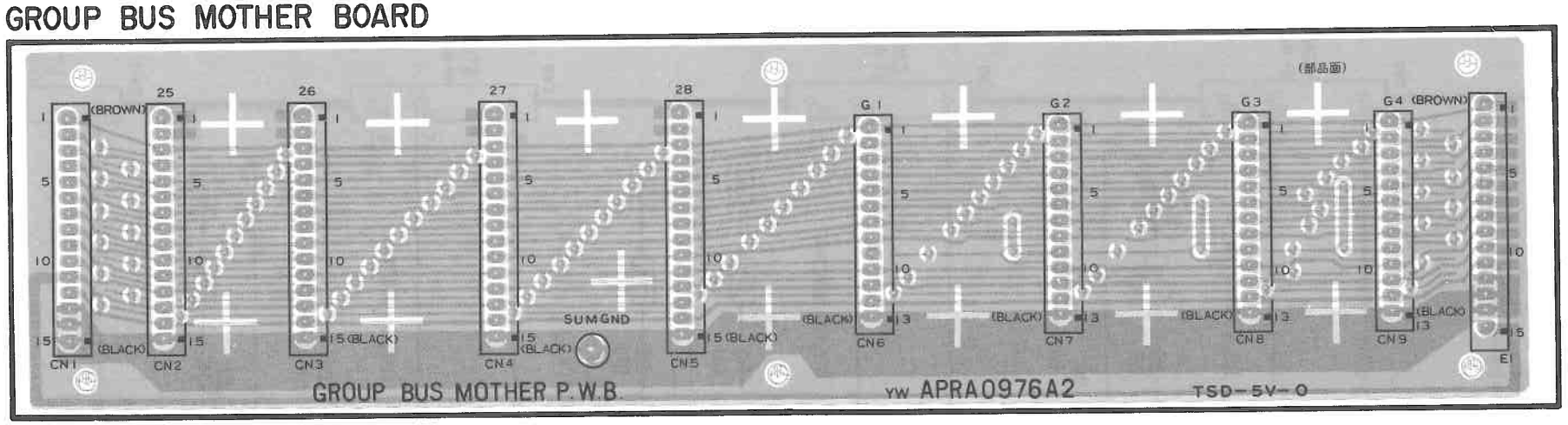

INPUT BUS MOTHER BOARD

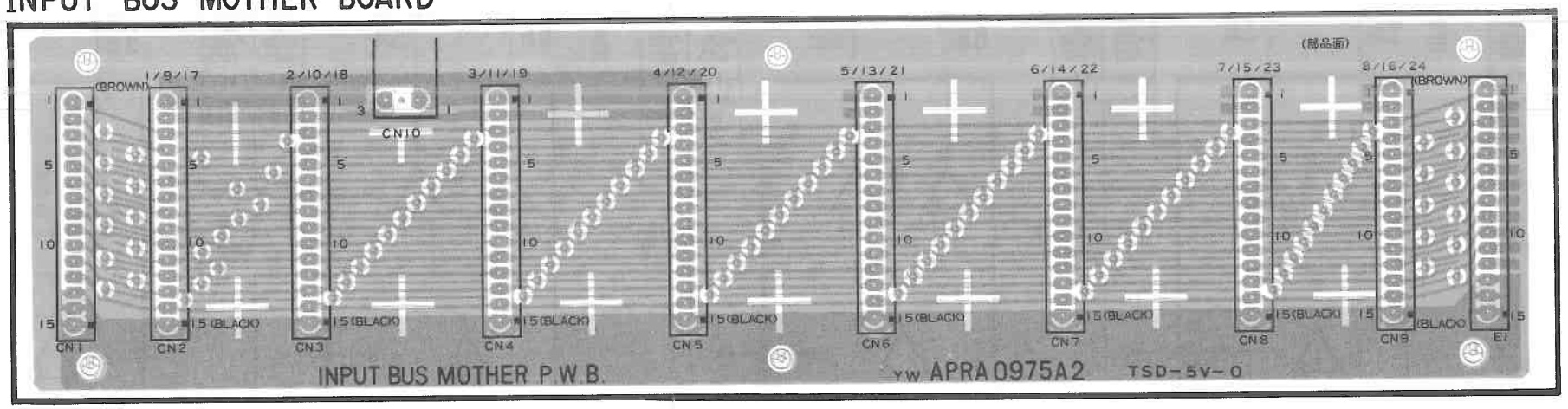

OUTPUT BUS MOTHER BOARD

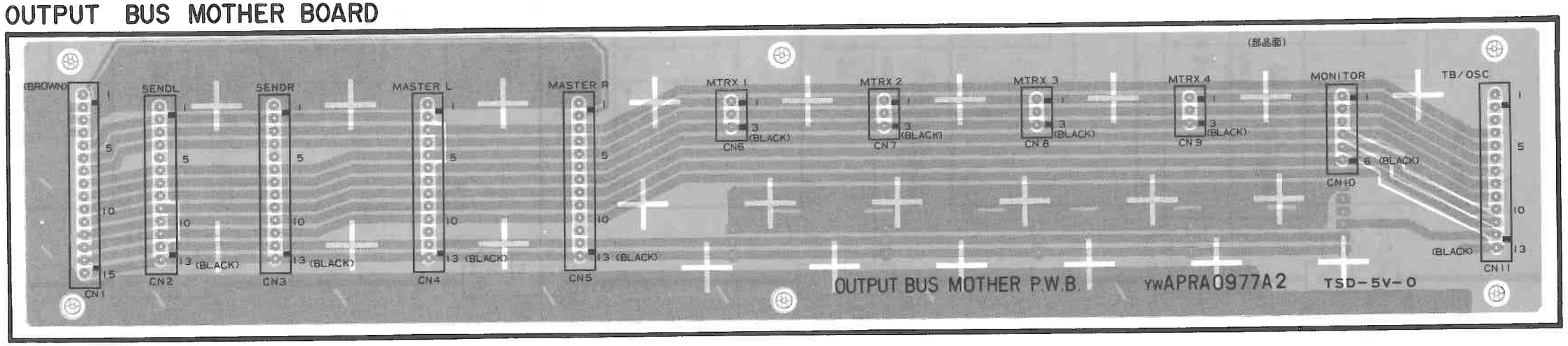

EXPLODI

○ Numbers shown screws

No.	Screws	Descriptions
①	XSB3+4FX	Binding Head Screws
②	XSB3+6FX	Binding Head Screws
③	XTB3+6FFX	Binding Head Tapping Screws
④	XTC3+6FFN	Oval Countersunk Head Machine Screws
⑤	XTB3+6FFZ	Binding Head Tapping Screws
⑥	XTB3+8FFX	Binding Head Tapping Screws
⑦	XTB3+10FFX	Biding Head Tapping Screws
⑧	XSB4+6FZ	Binding Head Screws
⑨	XSB4+8FX	Binding Head Screws
⑩	XSB4+8FZ	Binding Head Screws
⑪	XSB4+20FX	Binding Head Screws
⑫	XYN4+C8FX	Pan Head Machine Screws
⑬	XSB26+6FZ	Binding Head Screws
⑭	XSB26+8FZ	Binding Head Screws
⑮	XWA3BFX	Spring Lock Washers
⑯	XWA3BBN	Spring Lock Washers
⑰	XNG3DBN	Hexagon Head Nut
⑱	XNG3BFX	Hexagon Head Nut
⑲	XNF3EFX	Hexagon Head Nut
⑳	XWC4BFX	Internal Toothed Lock Washer
㉑	XNF26EFX	Hexagon Head Nut

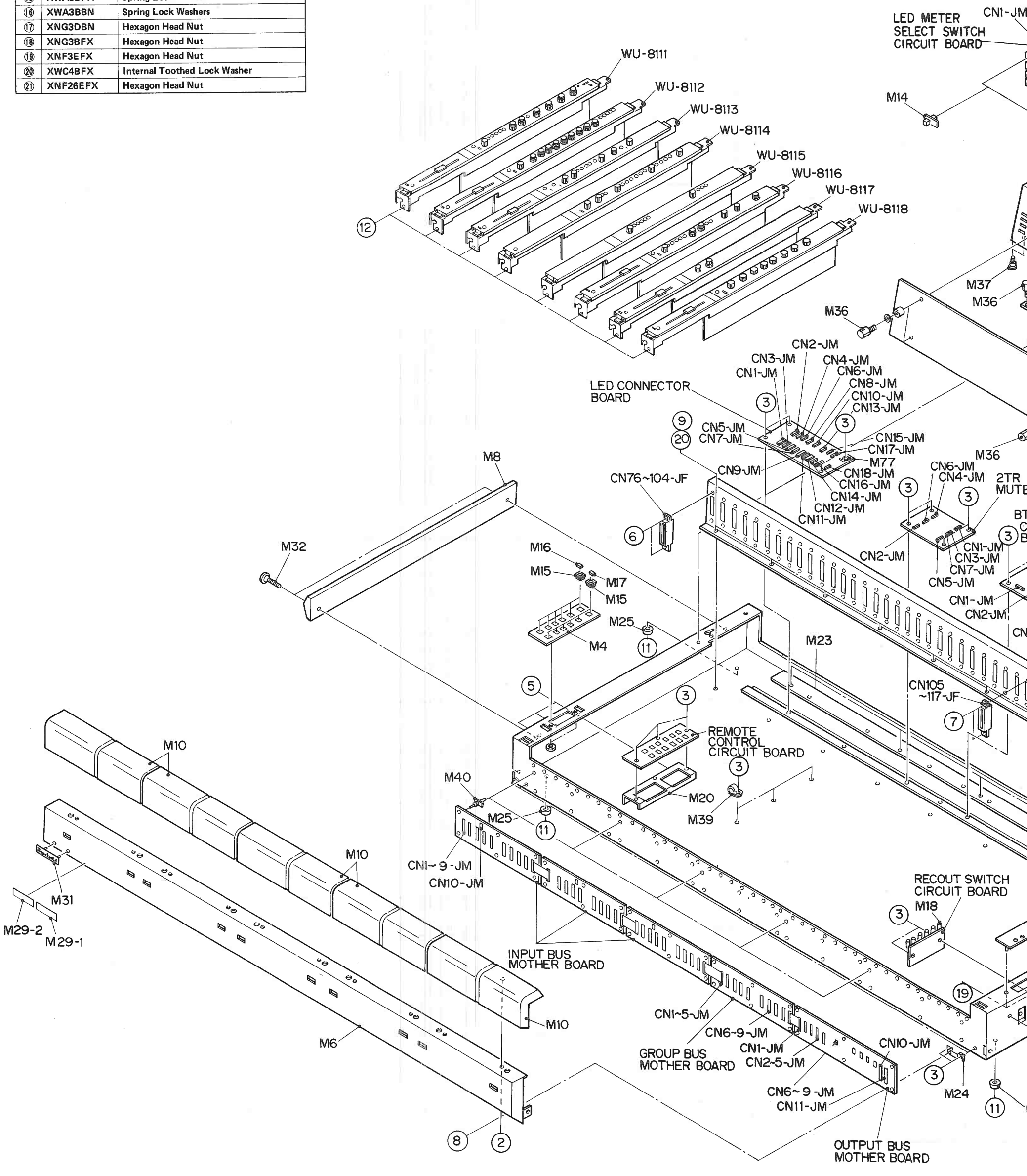

EW OF WR-8428

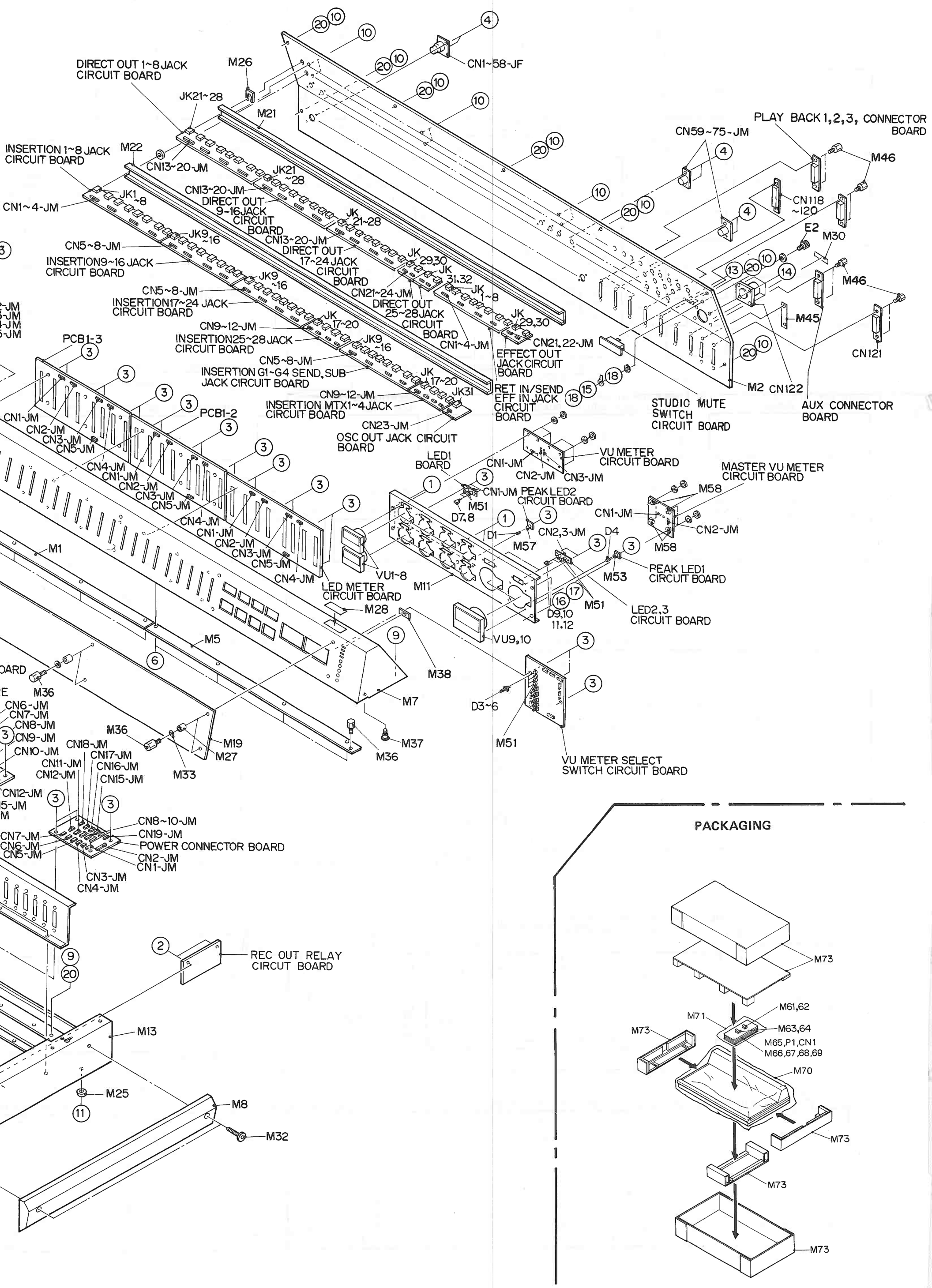
DIRECT OUT 1~8 JACK CIRCUIT BOARD
M26
JK21~28
M21
CN1~58-JF
INSERTION 1~8 JACK CIRCUIT BOARD
M22
CN13~20-JM
JK21 ~28
CN1~4-JM
JK1 ~8
CN13~20-JM
DIRECT OUT 9~16JACK CIRCUIT BOARD
JK 21~28
CN5~8-JM
JK9 ~16
INSERTION9~16 JACK CIRCUIT BOARD
CN13~20-JM
DIRECT OUT 17~24 JACK CIRCUIT BOARD
JK 29,30
JK 31,32
CN5~8-JM
JK9 ~16
INSERTION17~24 JACK CIRCUIT BOARD
CN21~24-JM
DIRECT OUT 25~28JACK CIRCUIT BOARD
JK 1~8
JK 29,30
CN9~12-JM
JK 17~20
INSERTION25~28 JACK CIRCUIT BOARD
CN1~4-JM
CN21,22-JM
EFFECT OUT JACK CIRCUIT BOARD
CN5~8-JM
JK9 ~16
INSERTION G1~G4 SEND, SUB JACK CIRCUIT BOARD
JK 17~20
CN9~12-JM
JK31
INSERTION MTX1~4JACK CIRCUIT BOARD
RET IN/SEND EFF IN JACK CIRCUIT BOARD
CN23-JM
OSC OUT JACK CIRCUIT BOARD
PLAY BACK 1,2,3, CONNECTOR BOARD
CN59~75-JM
M46
CN118 ~120
E2
M30
M46
M45
CN121
M2
CN122
STUDIO MUTE SWITCH CIRCUIT BOARD
AUX CONNECTOR BOARD
PCB1-3
CN1-JM
CN2-JM
CN3-JM
CN5-JM
PCB1-2
CN4-JM
CN1-JM
CN2-JM
CN3-JM
CN5-JM
CN4-JM
CN1-JM
CN2-JM
CN3-JM
CN5-JM
CN4-JM
LED1 BOARD
CN1-JM
CN2-JM
CN3-JM
VU METER CIRCUIT BOARD
MASTER VU METER CIRCUIT BOARD
M58
CN1-JM
CN2-JM
M58
CN1-JM
M51
D7,8
PEAK LED2 CIRCUIT BOARD
D1
M57
CN2,3-JM
D4
M53
PEAK LED1 CIRCUIT BOARD
M51
LED2,3 CIRCUIT BOARD
D9,10 11,12
M1
VU1~8
M11
LED METER CIRCUIT BOARD
M28
M5
VU9,10
M38
M7
D3~6
M51
VU METER SELECT SWITCH CIRCUIT BOARD
M36
M36
M37
M36
M19
M27
M33
CN6-JM
CN7-JM
CN8-JM
CN9-JM
CN10-JM
CN18-JM
CN17-JM
CN16-JM
CN15-JM
CN11-JM
CN12-JM
CN12-JM
CN8~10-JM
CN19-JM
POWER CONNECTOR BOARD
CN2-JM
CN1-JM
CN7-JM
CN6-JM
CN5-JM
CN3-JM
CN4-JM
REC OUT RELAY CIRCUT BOARD
M13
M25
M8
M32
PACKAGING
M73
M61,62
M71
M63,64
M73
M65,P1,CN1
M66,67,68,69
M70
M73
M73
M73

TOTAL CONNECTIO

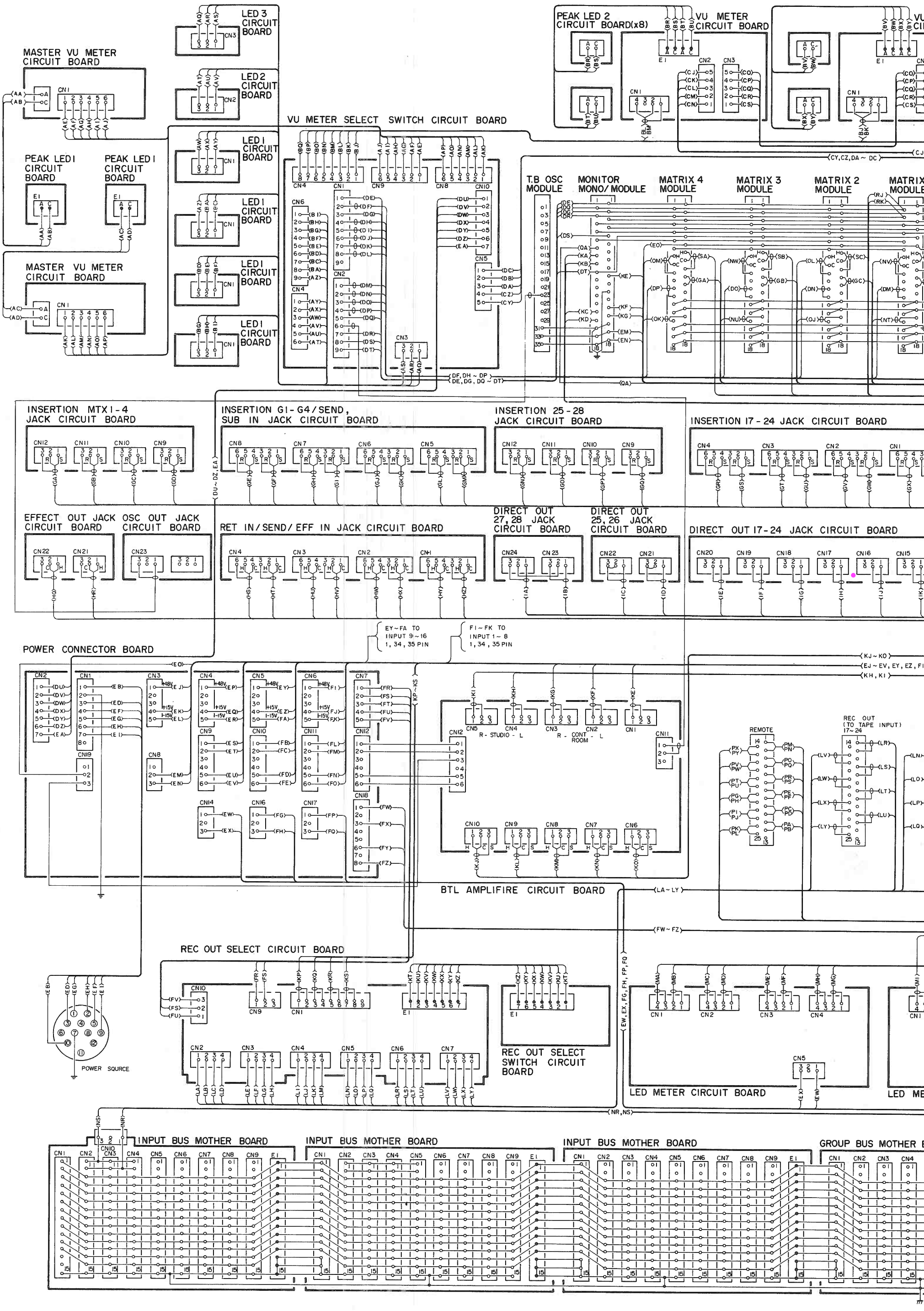

IAGRAM OF WR-8428

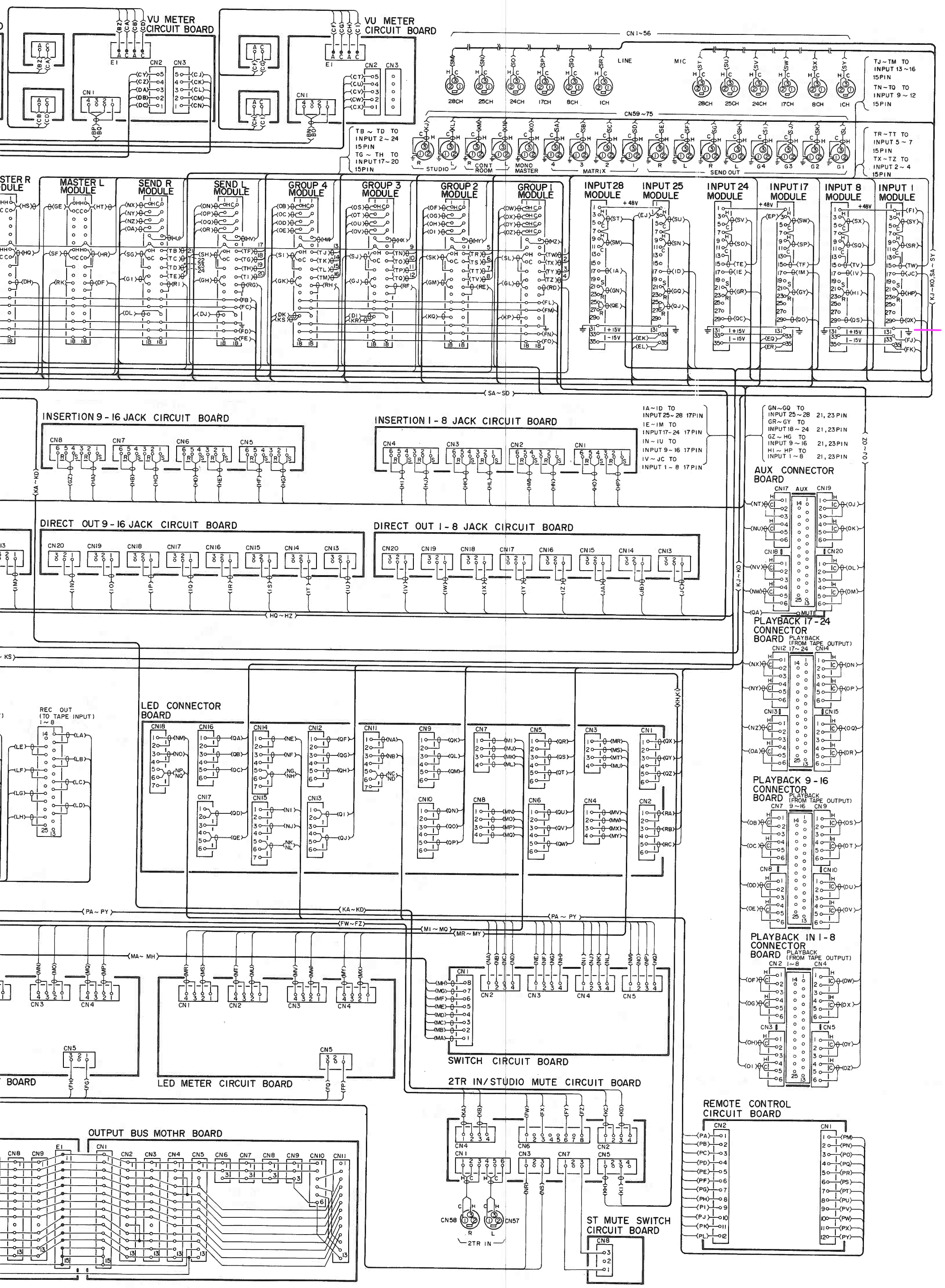

EXPLODED VIEW OF WU-8111

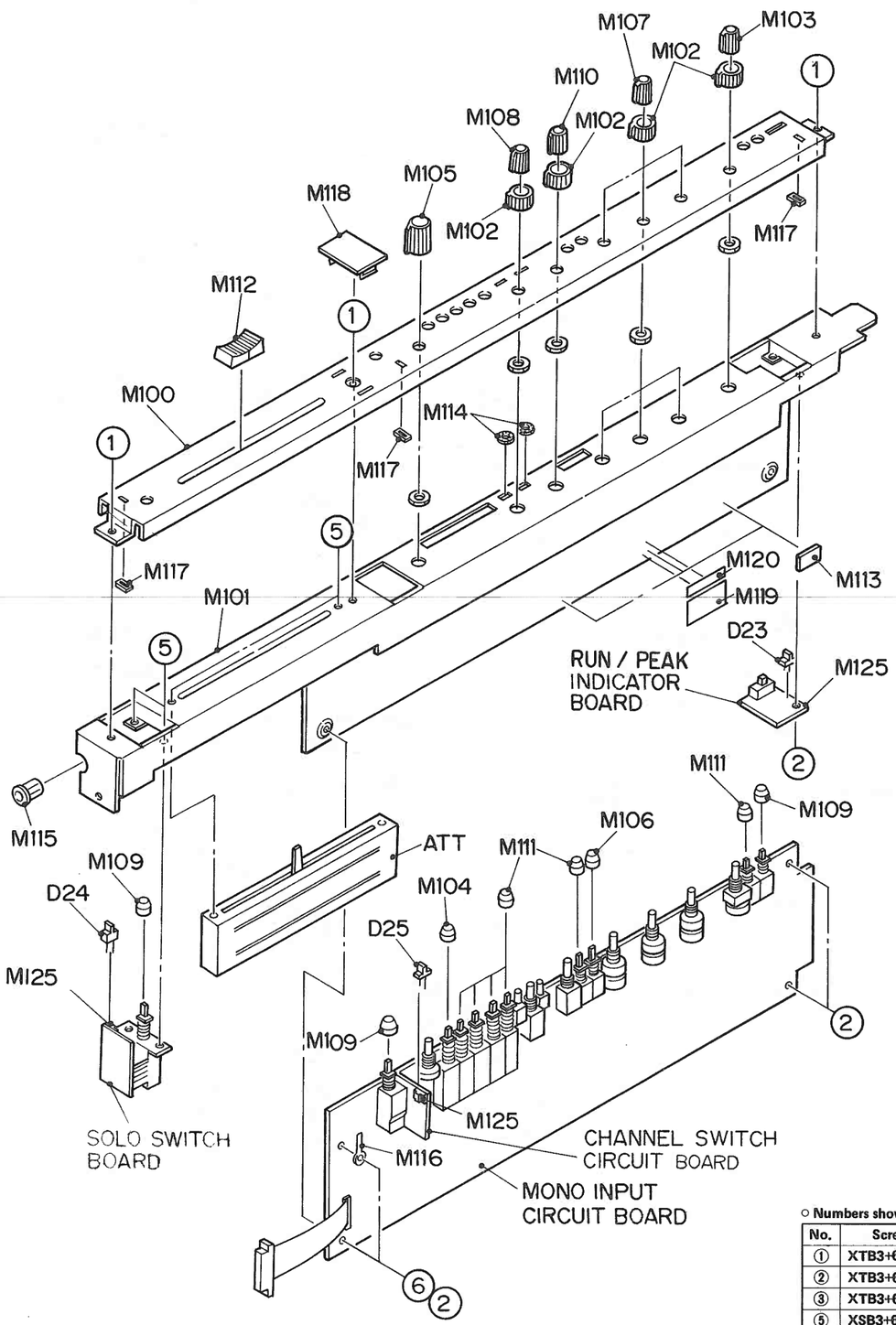

EXPLODED VIEW OF WU-8112

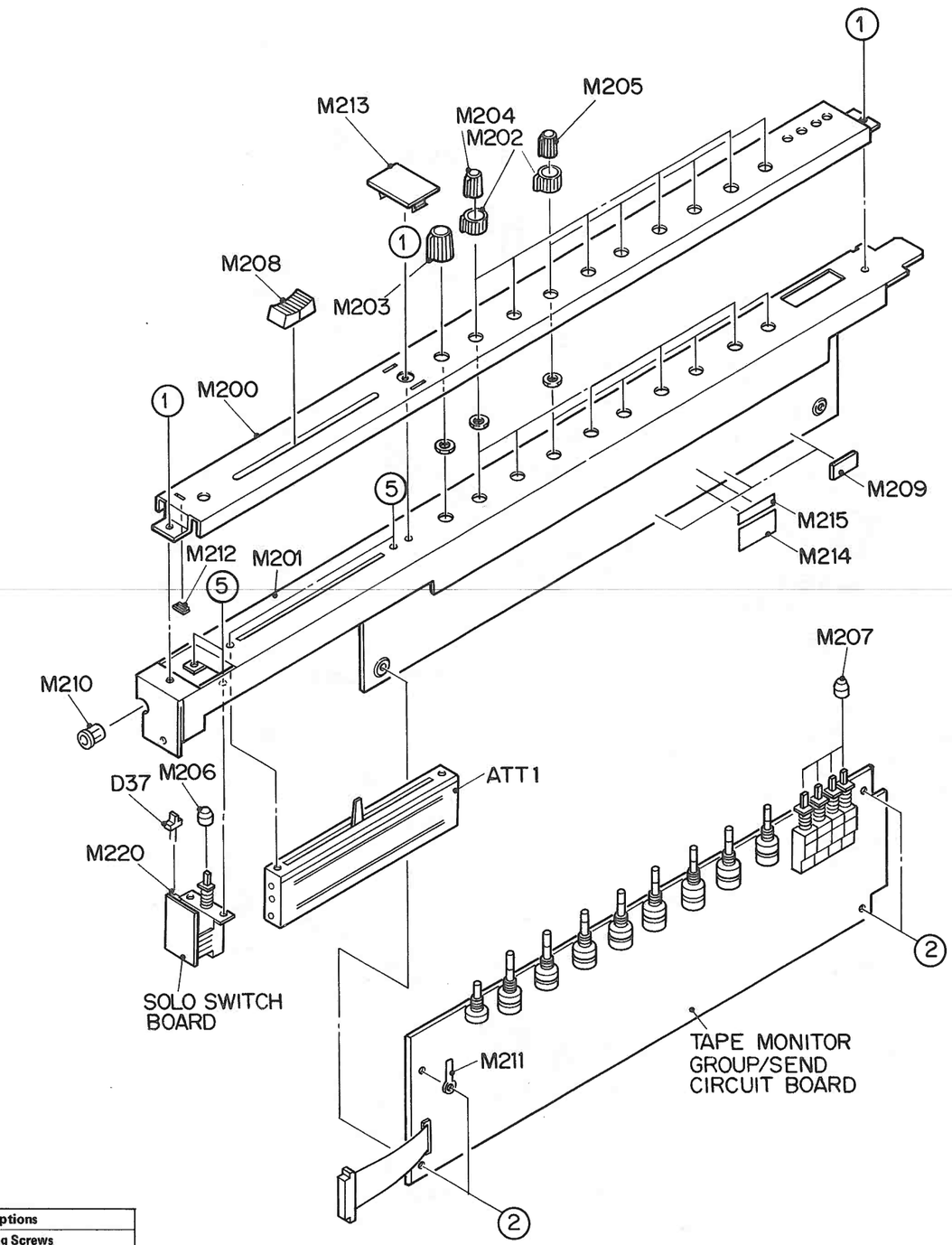

○ Numbers show screws

No.	Screws	Descriptions
①	XTB3+6FFZ	Binding Head Tapping Screws
②	XTB3+6FFX	Binding Head Tapping Screws
③	XTB3+6FFN	Oval Countersunk Head Machine Screws
⑤	XSB3+6FX	Binding Head Machine Screws
⑥	XWV3FX	Spring Washers

EXPLODED VIEW OF WU-8113

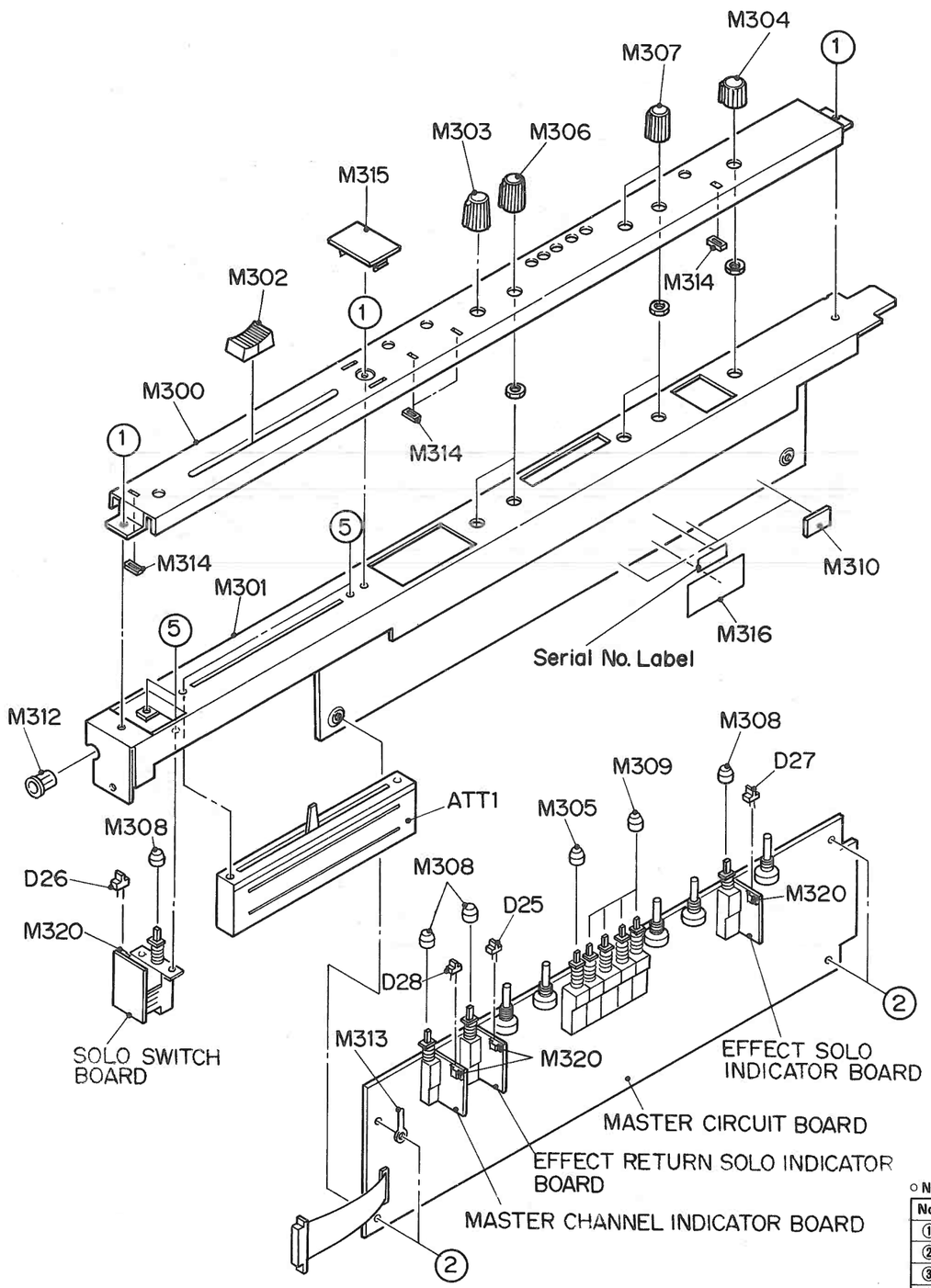

EXPLODED VIEW OF WU-8114

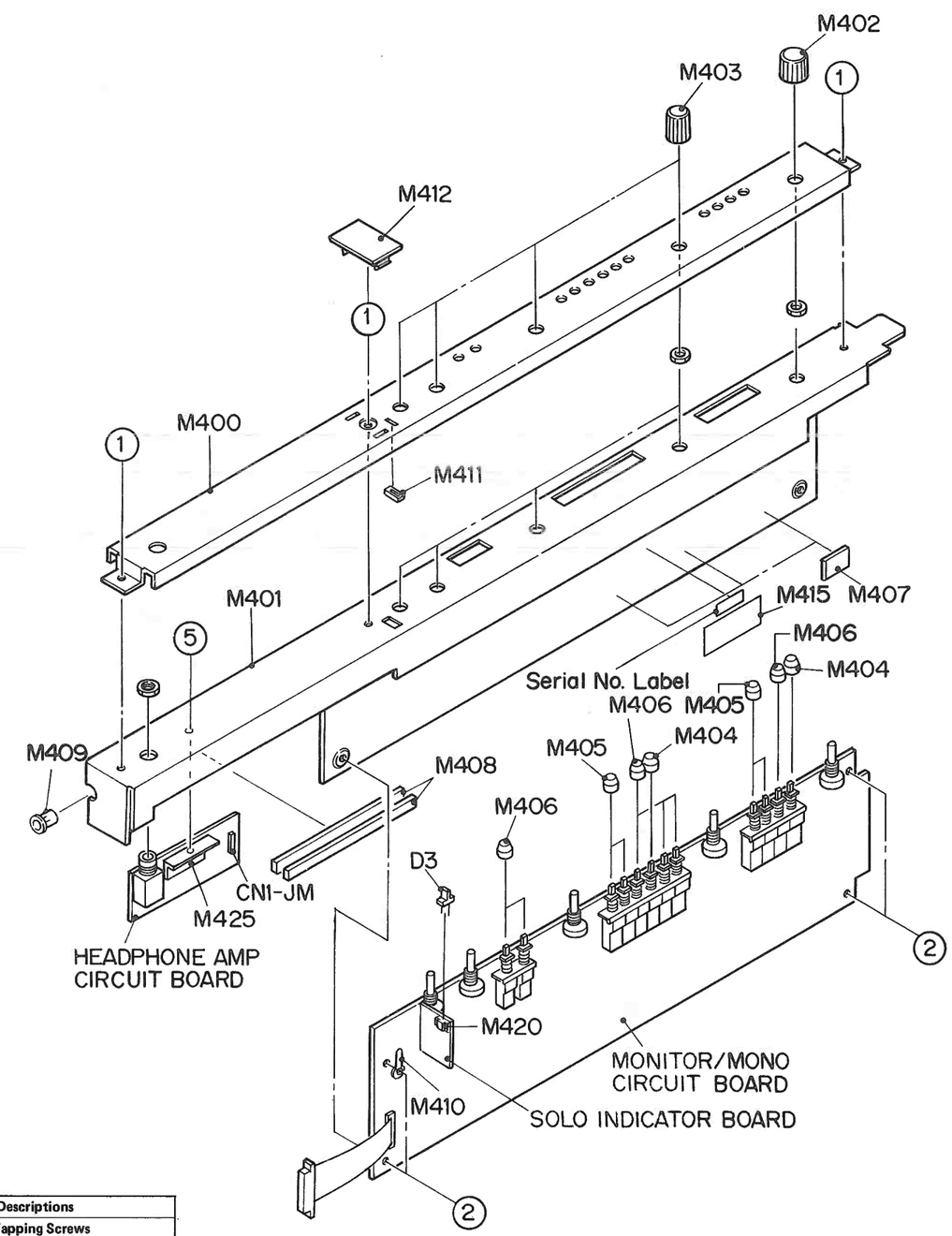

○ Numbers show screws

No.	Screws	Descriptions
①	XTB3+6FFZ	Binding Head Tapping Screws
②	XTB3+6FFX	Binding Head Tapping Screws
③	XTB3+6FFN	Oval Countersunk Head Machine Screws
⑤	XSB3+6FX	Binding Head Machine Screws
⑥	XWV3FX	Spring Washers

EXPLODED VIEW OF WU-8115

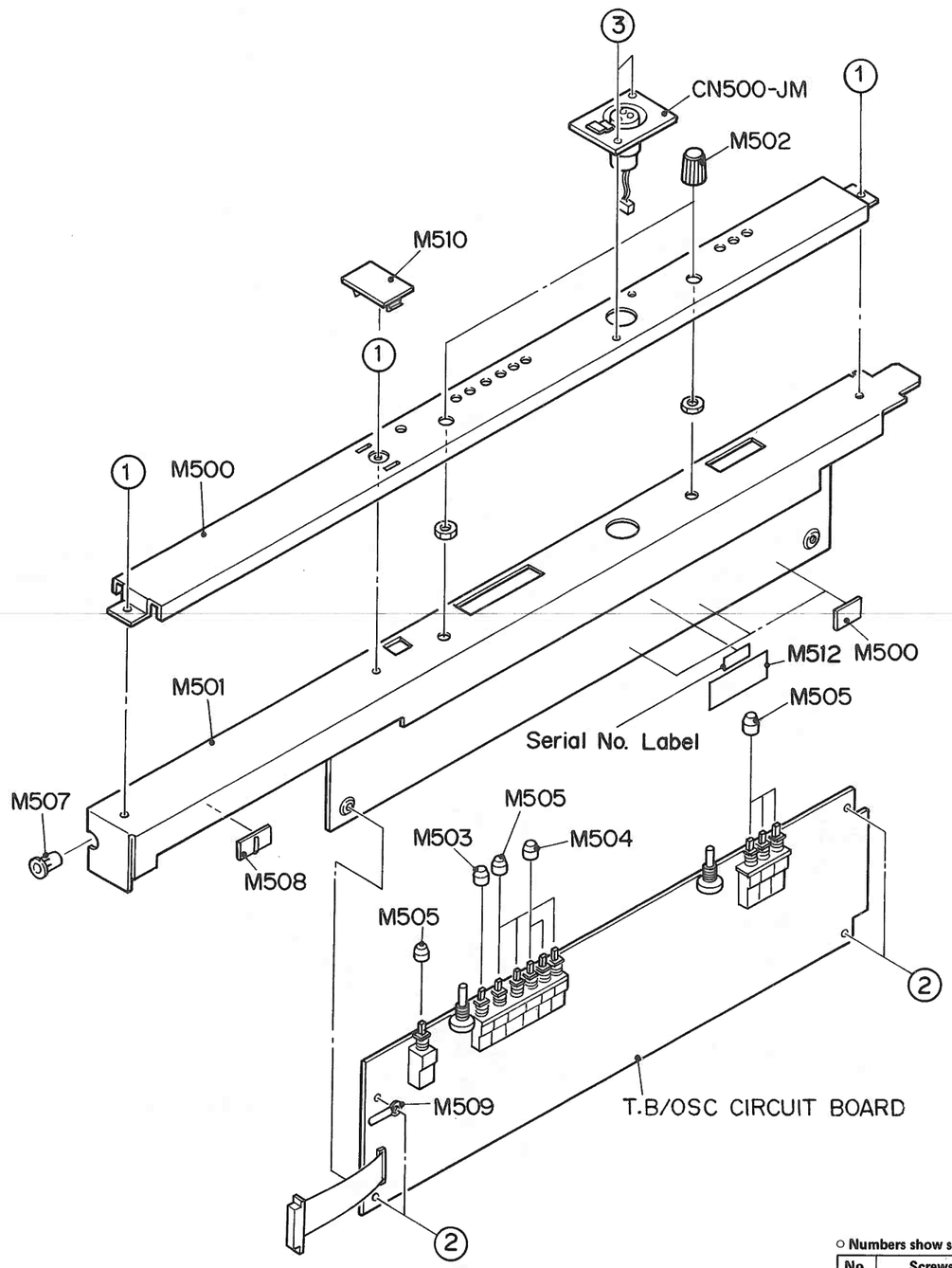

EXPLODED VIEW OF WU-8116

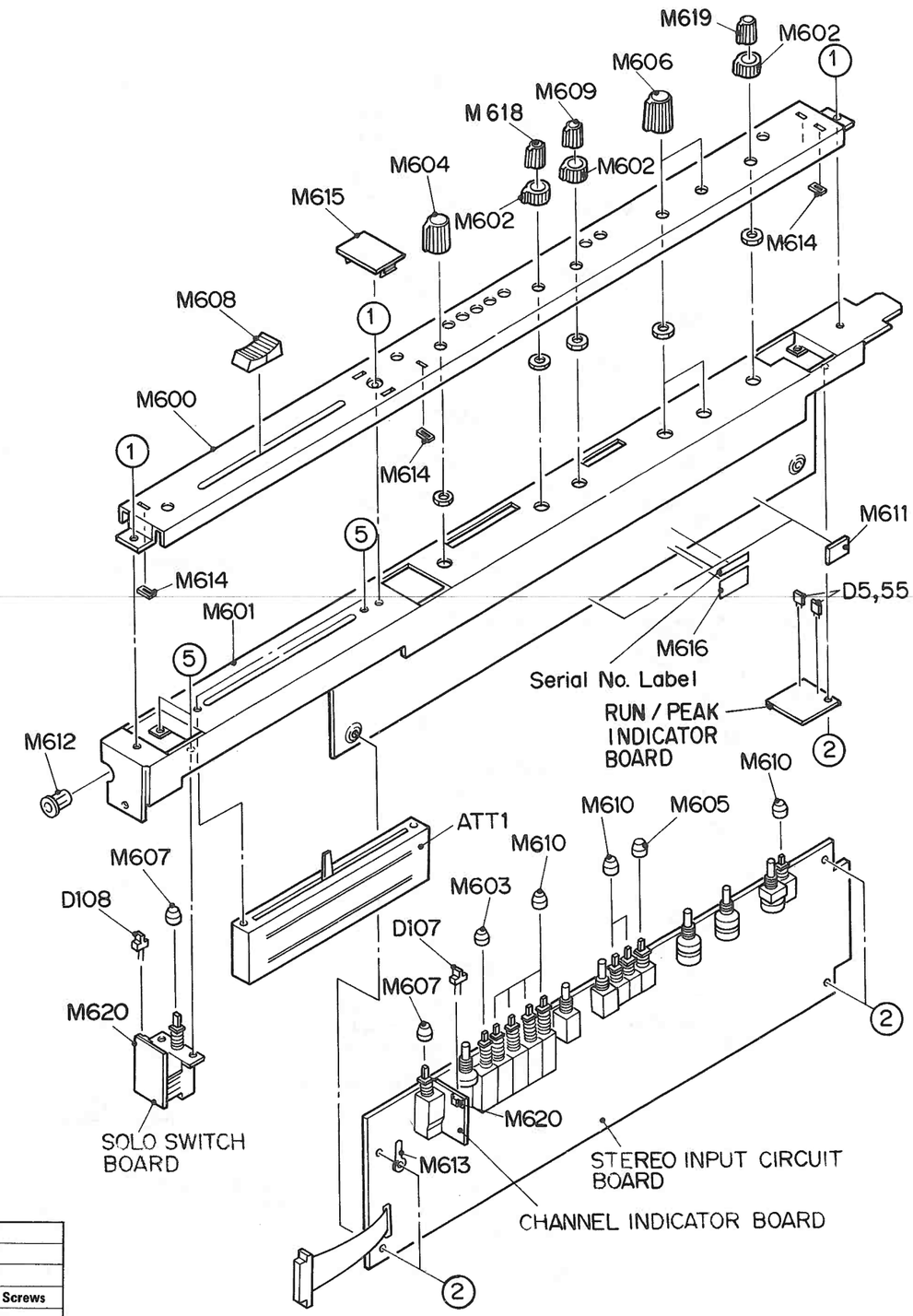

○ Numbers show screws

No.	Screws	Descriptions
①	XTB3+6FFZ	Binding Head Tapping Screws
②	XTB3+6FFX	Binding Head Tapping Screws
③	XTB3+6FFN	Oval Countersunk Head Machine Screws
⑤	XSB3+6FX	Binding Head Machine Screws
⑥	XWV3FX	Spring Washers

EXPLODED VIEW OF WU-8117

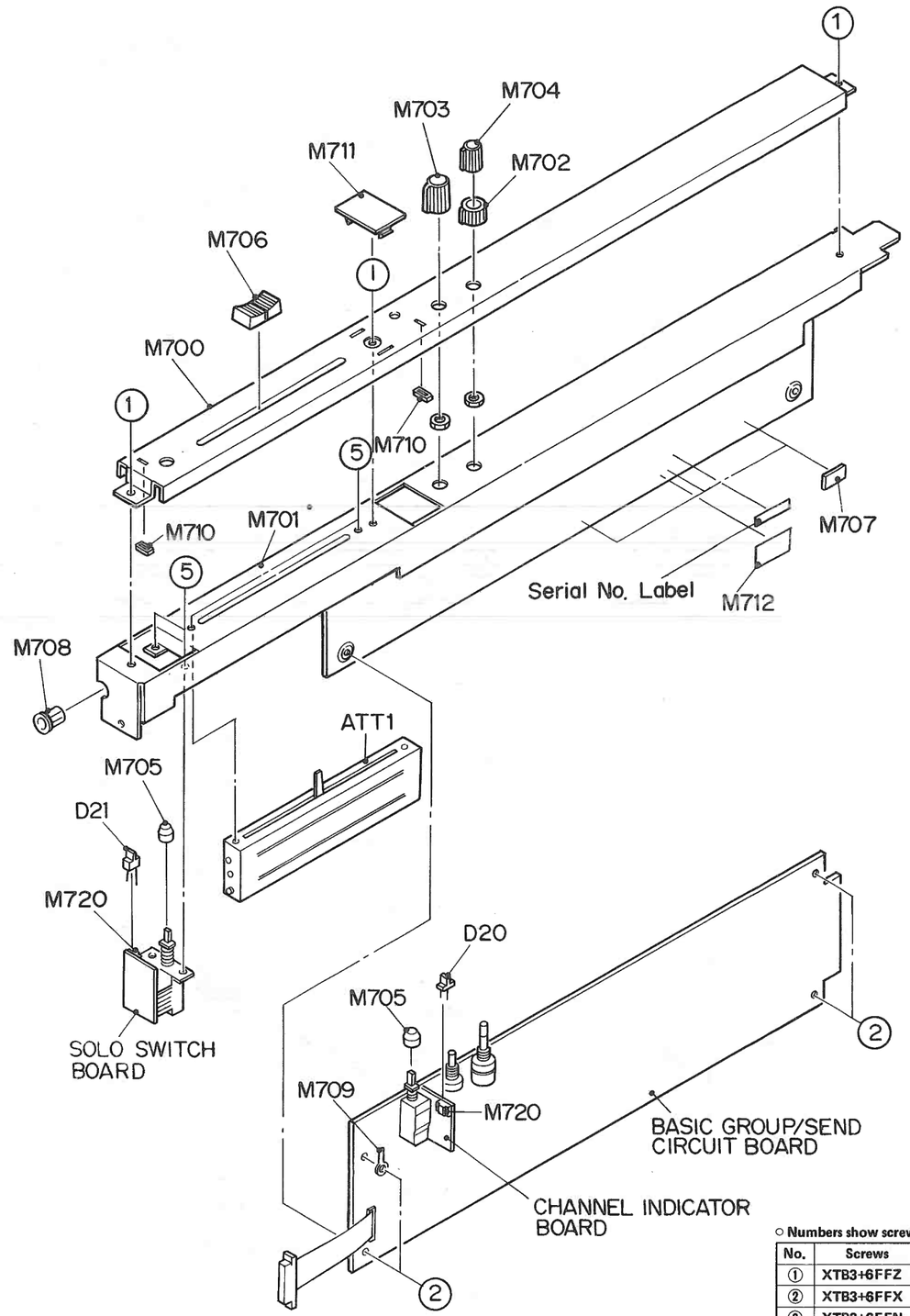

○ Numbers show screws

No.	Screws	Descriptions
①	XTB3+6FFZ	Binding Head Tapping Screws
②	XTB3+6FFX	Binding Head Tapping Screws
③	XTB3+6FFN	Oval Countersunk Head Machine Screws
⑤	XSB3+6FX	Binding Head Machine Screws
⑥	XWV3FX	Spring Washers

EXPLODED VIEW OF WU-8118

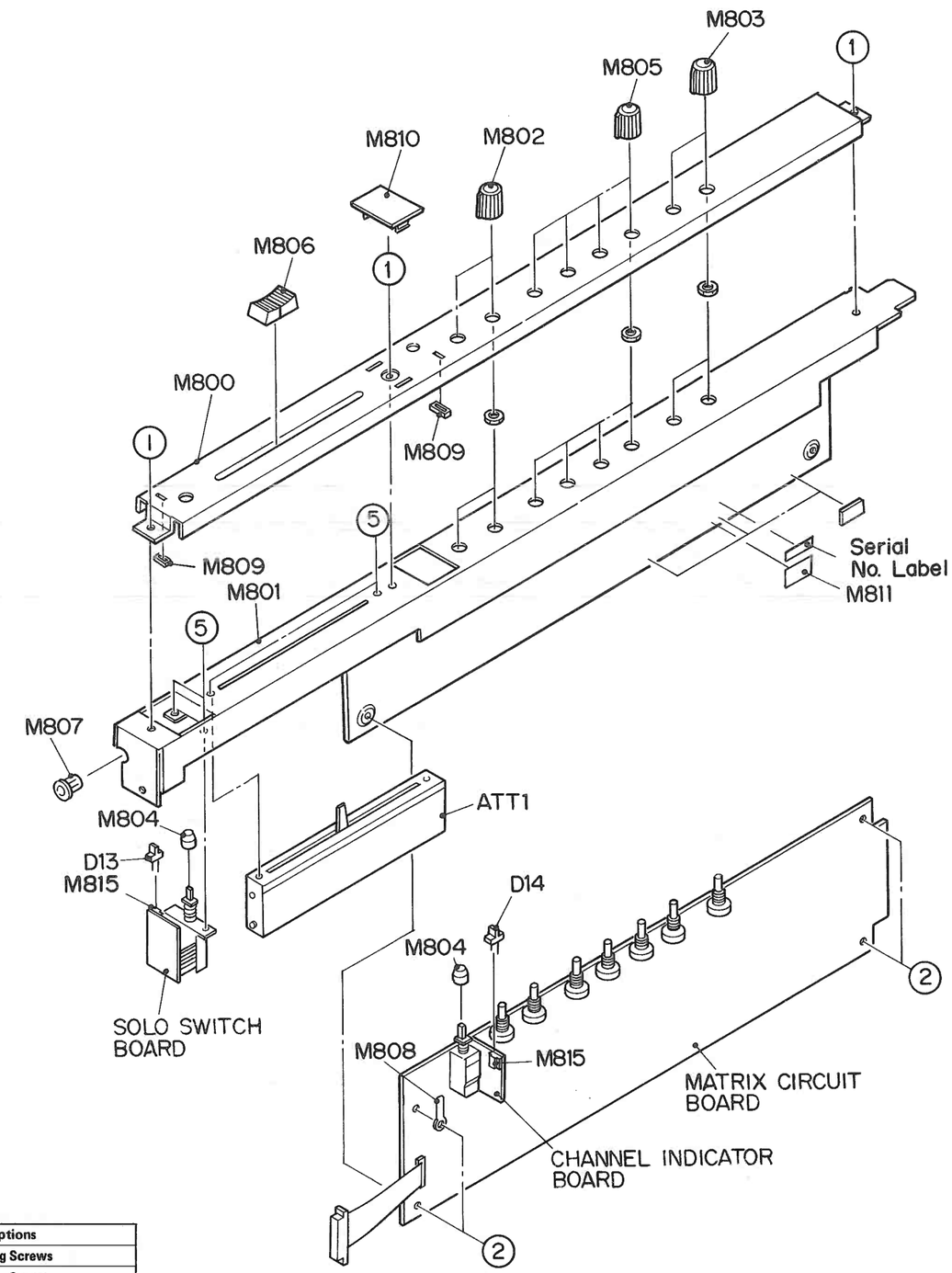

PACKAGING

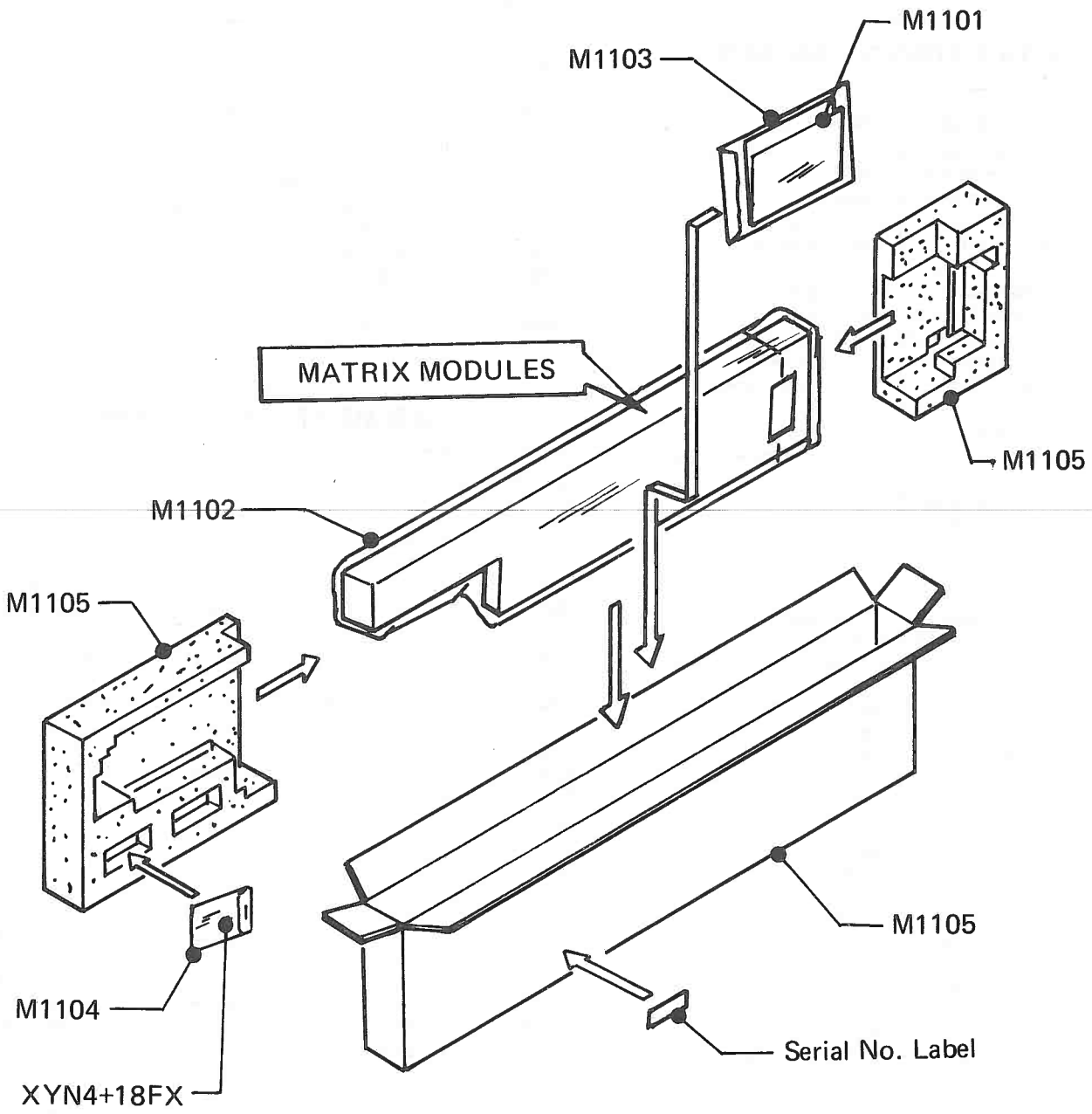
M1101
M1103
MATRIX MODULES
M1105
M1102
M1105
M1105
M1104
Serial No. Label
XYN4+18FX

REPLACEMENT PARTS LIST

Important Notice

1. Components identified by "⚠" mark have special characteristics important for safety.
   When replacing any of these components, use only manufacturer's specified parts.
2. Components identified by "o" mark are new parts used from this model.
3. Complete printed circuit board assembly is not available as replacement part.

MIXING CONSOLE WR-8428

MISCELLANEOUS

SYMBOL NO.	PART NO.	DESCRIPTION
VU1-8	YWAMEA0005A4	Meter
VU9,10	YWAMEA0006A4	Meter
CN1-58-JF	YWFM-3-31L	3 pinConnector
CN59-75-JF	YWFM-3-32L	3 pin Connector
CN76-104-JF	CR4E18S4W	18 pin Connector
CN105-JF-	YWCR2136DA3W	36 pin Connector
CN117-JF	YWCR2136DA3W	36 pin Connector
CN118-121	YWSAST25P02	25 pin Connector
CN122	YWGK-12-32S	12 pin Power Connector
E2	YWUB0029	Terminal
M1	o YWA5WA0637A3	Mounting Plate A forMeter Case
M2	o YWA5WA0638A1	Rear Panel
M3	o YWA5WA0639A4	REC Out Switch Panel
M4	o YWA5WA0640A3	Remote Control Panel
M5	o YWA5WB0637B3	Mounting Plate B for Meter Case
M6	o YWA5EA0380A1	Front Cover
M7	o YWA5KA0621A1	Meter Case
M8	o YWA5DA0165A2	Side Base(X2)
M10	YWS5DB0003A2	Ornament for Front Panel Case
M11	o YWA2KA0322A2	Meter Chassis
M12	o YWA2KA0323A1	Connector Chassis
M13	o YWA2KA0324A1	Main Chassis
M14	YWA5RA0106A3	Knob
M15	YWA6JA0022A3	Button
M16	YWA6JF0016A3	Button
M17	YWA6JG0016A3	Button
M18	YWS5RI0002A4	Knob
M19	o YWA1SA0029A3	Decoration Glass
M20	YWA2SA0467A4	Mounting Angle
M21	o YWA2SA0939A3	Mounting Angle
M22	o YWA2SA0940A3	Mounting Angle
M23	o YWA2SA0942A3	Mounting Angle
M24	o YWA2TA0113A4	Mounting Bracket
M25	YWS-WB03	Rubber Foot (X4)
M26	YWLJ0999480	Plate
M27	YWS2NA0002A4	Spacer
M28	YWA7SA0351A4	Label
M29-1	YWA7SA0393A4	Label
M29-2	YWA7SA0717A4	Caution Label
M30	YWAE6UB10	Label
M31	YWS-LM025	Panasonic Badge
M32	YWJCB0103MXK	Special Screw
M33	S1KA0003A4	Washer
M34	UL-13	Cord Clamp
M35	YWUL-18	Cord Clamp
M36	XVE4A10FNK-S	Standard Screws A
M37	YWE5100EM01	Standard Screws B
M38	o YWA2EA0055A4	Guide
M39	YWNK2N	Support A
M40	YWPCB4L	Support B
M41	YWPCB4S	Support C
M45	o YWA5WA0683A4	Blank Panel
M46	o YWXM2Z0021	Mounting screw for Connector

LED METER CIRCUIT BOARD

SYMBOL NO.	PART NO.	DESCRIPTION	
IC1-8	AN6891	IC	
D1-8	LN121185P	LED	
D9-16	MA165	Diode	
R1	ERDS2TJ682	Carbon	6.8K ohms 1/8W
R2	ERDS2TJ124	Carbon	120K ohms 1/8W
R3	ERDS2TJ151	Carbon	150 ohms 1/8W
R4	ERDS2TJ682	Carbon	6.8K ohms 1/8W
R5	ERDS2TJ124	Carbon	120K ohms 1/8W
R6	ERDS2TJ151	Carbon	150 ohms 1/8W
R7	ERDS2TJ682	Carbon	6.8K ohms 1/8W
R8	ERDS2TJ124	Carbon	120K ohms 1/8W
R9	ERDS2TJ151	Carbon	150 ohms 1/8W
R10	ERDS2TJ682	Carbon	6.8K ohms 1/8W
R11	ERDS2TJ124	Carbon	120K ohms 1/8W
R12	ERDS2TJ151	Carbon	150 ohms 1/8W
R13	ERDS2TJ682	Carbon	6.8K ohms 1/8W
R14	ERDS2TJ124	Carbon	120K ohms 1/8W
R15	ERDS2TJ151	Carbon	150 ohms 1/8W
R16	ERDS2TJ682	Carbon	6.8K ohms 1/8W
R17	ERDS2TJ124	Carbon	120K ohms 1/8W
R18	ERDS2TJ151	Carbon	150 ohms 1/8W
R19	ERDS2TJ682	Carbon	6.8K ohms 1/8W
R20	ERDS2TJ124	Carbon	120K ohms 1/8W
R21	ERDS2TJ151	Carbon	150 ohms 1/8W
R22	ERDS2TJ682	Carbon	6.8K ohms 1/8W
R23	ERDS2TJ124	Carbon	120K ohms 1/8W
R24	ERDS2TJ151	Carbon	150 ohms 1/8W
R25-32	ERDS2TJ103	Carbon	10K ohms 1/8W
VR1-8	EVNK4AA00B23	Variable Resistor	2K ohms

SYMBOL NO.	PART NO.	DESCRIPTION	
C1-8	ECEA1EU100	Electrolytic	10 µF 25V
C9	YWUP05B102KN	Ceramic	1000 pF 50V
C10	ECEA1HU2R2	Electrolytic	2.2 µF 50V
C11	YWUP05B102KN	Ceramic	1000 pF 50V
C12	ECEA1HU2R2	Electrolytic	2.2 µF 50V
C13	YWUP05B102KN	Ceramic	1000 pF 50V
C14	ECEA1HU2R2	Electrolytic	2.2 µF 50V
C15	YWUP05B102KN	Ceramic	1000 pF 50V
C16	ECEA1HU2R2	Electrolytic	2.2 µF 50V
C17	YWUP05B102KN	Ceramic	1000 pF 50V
C18	ECEA1HU2R2	Electrolytic	2.2 µF 50V
C19	YWUP05B102KN	Ceramic	1000 pF 50V
C20	ECEA1HU2R2	Electrolytic	2.2 µF 50V
C21	YWUP05B102KN	Ceramic	1000 pF 50V
C22	ECEA1HU2R2	Electrolytic	2.2 µF 50V
C23	YWUP05B102KN	Ceramic	1000 pF 50V
C24	ECEA1HU2R2	Electrolytic	2.2 µF 50V
C25,26	ECEA1ES221	Electrolytic	220 µF 25V
F1	UN10020	Current Fuse	
J1	ERD25TC0	Jamper Resistor	
CN1-4-JM	YWS4BXHA	4 pin Jack Male	
CN5-JM	YWS3BXHA	3 pin Jack Male	

LED METER SELECT SWITCH CIRCUIT BOARD

SW1-4	YWSSB022L09	Slide Switch
CN1	YWB8BXHA	8 pin Jack Male
CN2-5	YWB4BXHA	4 pin Jack Male

INPUT BUS MOTHER CIRCUIT BOARD

CN1-9-JM	YWB15BXHA	15 pin Jack Male
CN10-JM	YWS3BXHA	3 pin Jack Male

GROUP BUS MOTHER CIRCUIT BOARD

CN1-5-JM	YWB15BXHA	15 pin Jack Male
CN6-9-JM	YWB13B-XHA	13 pin Jack Male

OUTPUT BUS MOTHER CIRCUIT BOARD

CN1-JM	YWB15BXHA	15 pin Jack Male
CN2-5-JM	YWB13B-XHA	13 pin Jack Male
CN6-9-JM	YWB3BXHA	3 pin Jack Male
CN10-JM	YWB6BXHA	6 pin Jack Male
CN11-JM	YWB13B-XHA	13 pin Jack Male

SYMBOL NO.	PART NO.	DESCRIPTION

LED CONNECTOR CIRCUIT BOARD

CN1,2-JM	YW5275-6A	6 pin Jack Male
CN3,4-JM	YWB4BXHA	4 pin Jack Male
CN5,6-JM	YW5275-6A	6 pin Jack Male
CN7,8-JM	YWB4BXHA	4 pin Jack Male
CN9,10-JM	YW5275-6A	6 pin Jack Male
CN11-JM	YWB7BXHA	7 pin Jack Male
CN12,13-JM	YW5275-6A	6 pin Jack Male
CN14,15-JM	YWB7BXHA	7 pin Jack Male
CN16,17-JM	YW5275-6A	6 pin Jack Male
CN18-JM	YWB7BXHA	7 pin Jack Male
M58	YWA2QA0047A4	Electrode

POWER CONNECTOR BOARD

CN1-JM	YWB8PVH	8 pin Jack Male
CN2-JM	YWB7PVH	7 pin Jack Male
CN3-7-JM	YWB5P-VH	5 pin Jack Male
CN8-JM	YWB3PVH	3 pin Jack Male
CN9-12-JM	YWB6PVH	6 pin Jack Male
CN15-17-JM	YWB3PVH	3 pin Jack Male
CN18-JM	YWB8BXHA	8 pin Jack Male
CN19-JM	YW5275-3A	3 pin Jack Male

REMOTE CONTROL CIRCUIT BOARD

SW1-12	EVQPXR04K	Push Switch
CN1,2-JM	YWB12BXHA	12 pin Jack Male

BTL AMPLIFIER CIRCUIT BOARD

IC1-5	YWMC5762	IC	
Q1	2SC1509-RS	Transistor	
D3,4	MA711A	Diode	
D7,8	MA711A	Diode	
D11,12	MA711A	Diode	
D15,16	MA711A	Diode	
D19-22	MA711A	Diode	
D23-25	MA165	Diode	
D26	EM1Z	Diode	
D27	MA165	Diode	
R1	ERDS2TJ473	Carbon	47K ohms 1/8W
R2,3	ERDS2TJ103	Carbon	10K ohms 1/8W
R4-6	ERDS2TJ473	Carbon	47K ohms 1/8W

SYMBOL NO.	PART NO.	DESCRIPTION	
R7,8	ERDS2TJ103	Carbon	10K ohms 1/8W
R9-11	ERDS2TJ473	Carbon	47K ohms 1/8W
R12,13	ERDS2TJ103	Carbon	10K ohms 1/8W
R14-16	ERDS2TJ473	Carbon	47K ohms 1/8W
R17,18	ERDS2TJ103	Carbon	10K ohms 1/8W
R19-21	ERDS2TJ473	Carbon	47K ohms 1/8W
R22,23	ERDS2TJ103	Carbon	10K ohms 1/8W
R24,25	ERDS2TJ473	Carbon	47K ohms 1/8W
R26	ERDS2TJ103	Carbon	10K ohms 1/8W
R27	ERDS2TJ122	Carbon	1.2K ohms 1/8W
R28-30	ERDS2TJ473	Carbon	47K ohms 1/8W
C1	ROA25T100	Electrolytic	10 µF 25V
C2	ECEA1EU220	Electrolytic	22 µF 25V
C3,4	YWR0A25V221	Electrolytic	220 µF 25V
C7,8	ECKR1H472ZF	Ceramic	4700 pF 50V
C9,10	ECEA1ES221	Electrolytic	220 µF 25V
C11	ROA25T100	Electrolytic	10 µF 25V
C12	ECEA1EU220	Electrolytic	22 µF 25V
C13,14	YWR0A25V221	Electrolytic	220 µF 25V
C17,18	ECKR1H472ZF	Ceramic	4700 pF 50V
C19,20	ECEA1ES221	Electrolytic	220 µF 25V
C21	ROA25T100	Electrolytic	10 µF 25V
C22	ECEA1EU220	Electrolytic	22 µF 25V
C23,24	YWR0A25V221	Electrolytic	220 µF 25V
C27,28	ECKR1H472ZF	Ceramic	4700 pF 50V
C29,30	ECEA1ES221	Electrolytic	220 µF 25V
C31	ROA25T100	Electrolytic	10 µF 25V
C32	ECEA1EU220	Electrolytic	22 µF 25V
C33,34	YWR0A25V221	Electrolytic	220 µF 25V
C37,38	ECKR1H472ZF	Ceramic	4700 pF 50V
C39,40	ECEA1ES221	Electrolytic	220 µF 25V
C41	ROA25T100	Electrolytic	10 µF 25V
C42	ECEA1EU220	Electrolytic	22 µF 25V
C43,44	YWR0A25V221	Electrolytic	220 µF 25V
C47,48	ECKR1H472ZF	Ceramic	4700 pF 50V
C49,50	ECEA1ES221	Electrolytic	220 µF 25V
C51	ROA25T220	Electrolytic	22 µF 25V
C52-55	ECKR1H472ZF	Ceramic	4700 pF 50V
C56,57	ECEA1EU101	Electrolytic	100 µF 25V
C58	YWUP05B151KN	Ceramic	150 pF 50V
C59	ECKR1H472ZF	Ceramic	4700 pF 50V
C60	ECEA1EU101	Electrolytic	100 µF 25V
C61-65	ECKR1H472ZF	Ceramic	4700 pF 50V
RL1	AG202344	Relay	
RL2,3	YWAG204344	Relay	
F1-13	UN10020	Current Fuse	
CN1-11-JM	YW5275-3A	3 pin Jack Male	
CN12-JM	YWB6PVH	6 pin Jack Male	
M58	YWA2QA0047A4	Electrode	

SYMBOL NO.	PART NO.	DESCRIPTION	
REC OUT RELAY CIRCUIT BOARD			
Q1-6	2SA720-RS	Transistor	
D25-30	MA150	Diode	
R25,26	ERDS2TJ102	Carbon	1K ohms 1/8W
R27	ERDS2TJ103	Carbon	10K ohms 1/8W
R28	ERDS2FJ101	Carbon	100 ohms 1/8W
R29,30	ERDS2TJ102	Carbon	1K ohms 1/8W
R31	ERDS2TJ103	Carbon	10K ohms 1/8W
R32	ERDS2FJ101	Carbon	100 ohms 1/8W
R33,34	ERDS2TJ102	Carbon	1K ohms 1/8W
R35	ERDS2TJ103	Carbon	10K ohms 1/8W
R36	ERDS2FJ101	Carbon	100 ohms 1/8W
R37,38	ERDS2TJ102	Carbon	1K ohms 1/8W
R39	ERDS2TJ103	Carbon	10K ohms 1/8W
R40	ERDS2FJ101	Carbon	100 ohms 1/8W
R41,42	ERDS2TJ102	Carbon	1K ohms 1/8W
R43	ERDS2TJ103	Carbon	10K ohms 1/8W
R44	ERDS2FJ101	Carbon	100 ohms 1/8W
R45,46	ERDS2TJ102	Carbon	1K ohms 1/8W
R47	ERDS2TJ103	Carbon	10K ohms 1/8W
R48	ERDS2FJ101	Carbon	100 ohms 1/8W
R49	ERQ12AJ4R7P	Fuse Resistor	
C1	YWUP05B101KN	Ceramic	100 pF 50V
C2	ECQV1H333JZ	Plastic	0.033 µF 50V
C3	YWUP05B101KN	Ceramic	100 pF 50V
C4	ECQV1H333JZ	Plastic	0.033 µF 50V
C5	YWUP05B101KN	Ceramic	100 pF 50V
C6	ECQV1H333JZ	Plastic	0.033 µF 50V
C7	YWUP05B101KN	Ceramic	100 pF 50V
C8	ECQV1H333JZ	Plastic	0.033 µF 50V
C9	YWUP05B101KN	Ceramic	100 pF 50V
C10	ECQV1H333JZ	Plastic	0.033 µF 50V
C11	YWUP05B101KN	Ceramic	100 pF 50V
C12	ECQV1H333JZ	Plastic	0.033 µF 50V
C13	ECEA1EU101	Electrolytic	100 µF 25V
C14	YWUP05B102KN	Ceramic	1000 pF 50V
RL1-6	YWAG204344	Relay	
F1	UN10010	Current Fuse	
CN1-JM	YW5275-9A	9 pin Jack Male	
CN2-7-JM	YWB4BXHA	4 pin JackMale	
CN9,10-JM	YWB3PVH	3 pin Jack Male	
M58	YWA2QA0047A4	Electrode	
RECOUT SWITCH CIRCUITBOARD			
SW1-6	YWSUN102GSND	Push Switch	

SYMBOL NO.	PART NO.	DESCRIPTION	
2TR IN/STUDIO MUTE CIRCUIT BOARD			
IC1	YWUPC4570C	IC	
Q1	2SC1318-RS	Transistor	
D7-9	MA165	Diode	
D12,13	MA711A	Diode	
R1	ER010CKF6491	Metal	6.49K ohms 1/8W
R2	ER010CKF7501	Metal	7.5K ohms 1/8W
R3,4	ERO10CKF1502	Metal	15K ohms 1/8W
R5,6	ER010CKF7501	Metal	7.5K ohms 1/8W
R7	ERDS2TJ223	Carbon	22K ohms 1/8W
R8	ER010CKF6491	Metal	6.49K ohms 1/8W
R9	ER010CKF7501	Metal	7.5K ohms 1/8W
R10,11	ERO10CKF1502	Metal	15K ohms 1/8W
R12,13	ER010CKF7501	Metal	7.5K ohms 1/8W
R14-17	ERDS2TJ223	Carbon	22K ohms 1/8W
R18	ERDS2TJ122	Carbon	1.2K ohms 1/8W
R19	ERQ14AJ220P	Fuse Resistor	22 ohms 1/8W
R20,21	ERDS2TJ473	Carbon	47K ohms 1/8W
R22-25	ERDS2FJ101	Carbon	100 ohms 1/8W
C3,4	YWR0A25V100	Electrolytic	10 µF 25V
C5,6	YWUP05S330JN	Ceramic	33 pF 50V
C7	YWR0A25V220	Electrolytic	22 µF 25V
C10,11	YWR0A25V100	Electrolytic	10 µF 25V
C12,13	YWUP05S330JN	Ceramic	33 pF 50V
C14	YWR0A25V220	Electrolytic	22 µF 25V
C15	YWUP05B151KN	Ceramic	150 pF 50V
C16	ECEA1EU470	Electrolytic	47 µF 25V
C17,18	ECKF1H472ZF	Ceramic	4700 pF 50V
C19,20	ECEA1EU101	Electrolytic	100 µF 25V
RL1	AG202344	Relay	
F1,2	UN10010	Current Fuse	
J1	ERD25TC0	Jamper Resistor	
CN1-JM	YW5275-6A	6 pin Connector	
CN2-JM	YW5275-4A	4 pin Connector	
CN3-JM	YWB3BXHA	3 pin Connector	
CN;4,5-JM	YW5275-4A	4 pin Connector	
CN6-JM	YWB8BXHA	8 pin Connector	
CN7-JM	YWB3BXHA	3 pin Jack Male	
M58	YWA2QA0047A4	Electrode	
STUDIO MUTE SWITCH CIRCUIT BOARD			
SW1	YWSSB022L06U	Slide Switch	
CN8-JM	YWS3BXHA	3 Pin JackMale	

SYMBOL NO.	PART NO.	DESCRIPTION	
INSERTION 1-8 JACK CIRCUIT BOARD			
R1-8	ERDS2FJ101	Carbon	100 ohms 1/8W
C1-8	YWUP05B101KN	Ceramic	100 pF 50V
JK1-8	YWLJ23068	Jack	
CN1-4-JM	YW5276-6A	6pin Jack Male	
INSERTION 9-16 JACK CIRCUIT BOARD			
R9-16	ERDS2FJ101	Carbon	100 ohms 1/8W
C9-16	YWUP05B101KN	Ceramic	100 pF 50V
JK9-16	YWLJ23068	Jack	
CN5-8-JM	YW5276-6A	6 pin JackMale	
INSERTION 25-28 JACK CIRCUIT BOARD			
R17-20	ERDS2FJ101	Carbon	100 ohms 1/8W
C17-20	YWUP05B101KN	Ceramic	100 pF 50V
JK17-20	YWLJ23068	Jack	
CN9-12-JM	YW5276-03A	3 pin Jack Male	
DIRECT OUT 1-8 JACK CIRCUIT BOARD			
JK21-28	YWLJ23068	Jack	
CN13-20-JM	YW5276-03A	3 pin Jack Male	
DIRECT OUT 25,26 JACKCIRCUIT BOARD			
JK29,30	YWLJ23068	Jack	
CN21,22-JM	YW5276-03A	3 pin Jack Male	
DIRECT OUT 27,28 JACK CIRCUIT BOARD			
JK31,32	YWLJ23068	Jack	
CN23,24-JM	YW5276-03A	3 pin Jack Male	

SYMBOL NO.	PART NO.	DESCRIPTION
RET/SEND EFF IN JACK CIRCUIT BOARD		
JK1-8	YWLJ23068	Jack
CN1-4	YW5276-6A	6 pin Jack Male
INSERTION 17-24 JACK CIRCUIT BOARD		
R9-16	ERDS2FJ101	Carbon 100 ohms 1/8W
C9-16	YWUP05B101KN	Ceramic 100 pF 50V
JK9-16	YWLJ23068	Jack
CN5-8	YW5276-6A	6 pin Jack Male
NSERTION MTX1-4 JACK CIRCUIT BOARD		
R17-20	ERDS2FJ101	Carbon 100 ohms 1/8W
C17-20	YWUP05B101KN	Ceramic 100 pF 50V
JK17-20	YWLJ23068	Jack
CN9-12-JM	YW5276-03A	3 pin Jack Male
DIRECT OUT 27,28 JACK CIRCUIT BOARD		
PJK21-28	YWLJ23068	Jack
CN13-JM-	YW5276-03A	3 pin Jack Male
CN20-JM	YW5276-03A	3 pin Jack Male
EFFECT OUT JACK CIRCUIT BOARD		
JK29,30	YWLJ23068	Jack
CN21,22-JM	YW5276-03A	3 pin Jack Male
OSC OUT JACK CIRCUIT BOARD		
JK31	YWLJ23068	Jack
CN23-JM	YW5276-03A	3 pin Jack Male
INSERTION G1-G4 SEND SUB JACK CIRCUIT BOARD		
R9-16	ERDS2FJ101	Carbon 100 ohms 1/8W
C9-16	YWUP05B101KN	Ceramic 100 pF 50V
JK9-16	YWLJ23068	Jack
CN5-8-JM	YW5276-6A	6 pin Jack Male

SYMBOL NO.	PART NO.	DESCRIPTION
DIRECT OUT 27,28 JACK CIRCUIT BOARD		
JK21-28	YWLJ23068	Jack
CN13-20-JM	YW5276-03A	3 pin Jack Male
MASTER VU METER CIRCUIT BOARD		
IC1	YWUPC4570C	IC
D1-3	MA165	Diode
R1,2	ERDS2TJ153	Carbon 15K ohms 1/8W
R3,4	ER010CKF1003	Metal 100K ohms 1/8W
R5	ERDS2TJ392	Carbon 3.9K ohms 1/8W
R6	ERDS2TJ222	Carbon 2.2K ohms 1/8W
R7	ERDS2TJ224	Carbon 220K ohms 1/8W
R8	ERO10CKF1102	Metal 11K ohms 1/8W
R9	ER010CKF1002	Metal 10K ohms 1/8W
R10	ERDS2TJ104	Carbon 100K ohms 1/8W
R11,12	ERDS2TJ332	Carbon 3.3K ohms 1/8W
VR	EVND4AA00B13	Variable Resistor 1K ohms
VR1	EVND4AA00B23	Variable Resistor 2K ohms
C1,2	ECEA1EU100	Electrolytic 10 µF 25V
C3	ECEA1HU010	Electrolytic 1 µF 50V
C4,5	ECEA1EU330	Electrolytic 33 µF 25V
C6	ECEA1EU470	Electrolytic 47 µF 25V
F1-3	UN10010	Current Fuse
CN1-JM	YWB6BXHA	6 pin Jack Male
CN2-JM	YWB3BXHA	3 pin Jack Male
M58	YWA2QA0047A4	Electrode
PEAK LED1 CIRCUIT BOARD		
D4	LN222RP	LED
M53	YWX90FR03	Protector
VU METER CIRCUIT BOARD		
IC1	YWUPC4570C	IC
D1,2	MA165	Diode
R1	ERDS2TJ222	Carbon 2.2K ohms 1/8W
R2	ERDS2TJ224	Carbon 220K ohms 1/8W
R3	ERDS2TJ222	Carbon 2.2K ohms 1/8W
R4	ERDS2TJ474	Carbon 470K ohms 1/8W
R5,6	ERDS2TJ332	Carbon 3.3K ohms 1/8W
R7	ERDS2TJ222	Carbon 2.2K ohms 1/8W
R8	ERDS2TJ224	Carbon 220K ohms 1/8W

SYMBOL NO.	PART NO.	DESCRIPTION	
R9	ERDS2TJ222	Carbon	2.2K ohms 1/8W
R10	ERDS2TJ474	Carbon	470K ohms 1/8W
R11,12	ERDS2TJ332	Carbon	3.3K ohms1/8W
13	ERO10TKF1102	Metal	11K ohms 1/8W
R14	ER010CKF1002	Metal	10K ohms 1/8W
R15,16	ERDS2TJ392	Carbon	3.9K ohms1/8W
VR	EVND4AA00B13	Variable Resistor	1K ohms
VR1,2	EVND4AA00B23	Variable Resistor	2K ohms
C1,2	ECEA1HU010	Electrolytic	1 µF 50V
C4,5	ECEA1EU220	Electrolytic	22 µF 25V
C6	ECKR1H472ZF	Ceramic	4700 pF 50V
C7	ECKF1H472ZF	Ceramic	4700 pF 50V
F1,2	UN10010	Current Fuse	
CN1-JM	YWB4BXHA	4 pin Jack Male	
CN2,3-JM	YWB5B-XHA	5 pin Jack Male	
M58	YWA2QA0047A4	Electrode	

PERK LED2 CIRCUIT BOARD

D1	LN222RP	LED
M57	YWX90FR03	Protector

VU METWR SELECT SWITCH CIRCUIT BOARD

IC1	YWUPC4570C	IC	
IC2	YWM5201P	IC	
Q1	2SC1318-RS	Transistor	
Q2	2SA720-RS	Transistor	
Q3,4	2SC1318-RS	Transistor	
D1,2	0A91	Diode	
D3-6	LN317GP	LED	
R1,2	ERDS2TJ473	Carbon	47K ohms 1/8W
R3,4	ER010CKF1003	Metal	100K ohms 1/8W
R5,6	ERDS2TJ473	Carbon	47K ohms 1/8W
R7,8	ER010CKF1003	Metal	100K ohms 1/8W
R10-13	ERDS2TJ473	Carbon	47K ohms 1/8W
R14,15	ERDS2TJ102	Carbon	1K ohms 1/8W
R16	ERDS2TJ473	Carbon	47K ohms 1/8W
R17	ERDS2TJ102	Carbon	1K ohms 1/8W
R18,19	ERDS2TJ223	Carbon	22K ohms 1/8W
R20	ERD25FJ152	Carbon	1.5K ohms 1/4W
R21,22	ERDS2TJ223	Carbon	22K ohms 1/8W
R23	ERD25FJ152	Carbon	1.5K ohms 1/4W
R24	ERDS2TJ223	Carbon	22K ohms 1/8W
R25	ERDS2FJ101	Carbon	100 ohms 1/8W
R26,27	ERDS2TJ473	Carbon	47K ohms 1/8W
R28	ERD25FJ751P	Carbon	750 ohms 1/4W
R29	ERD25FJ102	Carbon	1K ohms 1/4W

SYMBOL NO.	PART NO.	DESCRIPTION	
R30,31	ERD25FJ182P	Carbon	1.8K ohms 1/4W
R32,33	ERQ14AJ220P	Fuse Resistor	22 ohms 1/4W
R34	ERD25FJ152	Carbon	1.5K ohms 1/4W
R35	ERQ14AJ220P	Fuse Resistor	22 ohms 1/4W
R36,37	ERD25FJ332P	Carbon	3.3K ohms 1/4W
C1-6	ECEA1EU100	Electrolytic	10 µF 25V
C7	ECKF1H472ZF	Ceramic	4700 pF 50V
C8,9	ECEA1EU470	Electrolytic	47 µF 25V
C10,11	ECKF1H472ZF	Ceramic	4700 pF 50V
C12	ECEA1EU470	Electrolytic	47 µF 25V
SW1-5	YWSUT110	Push Switch	
F1	UN10010	Current Fuse	
CN1,2-JM	YW5275-9A	9 pin JackMale	
CN3-JM	YWB3BXHA	3 pin JackMale	
CN4-JM	YWB8BXHA	8 pin JackMale	
CN5-JM	YWB5B-XHA	5 pin JackMale	
CN6-JM	YWB9BXHA	9 pin JackMale	
CN7-9-JM	YWB6BXHA	6 pin JackMale	
CN10-JM	YWB7BXHA	7 pin JackMale	
M51	YWJ506PFM02	Spacer	

LED 1 CIRCUIT BOARD

D7,8	LN417YP	LED
CN1-JM	YWB3BXHA	3 pin JackMale
M51	YWJ506PFM02	Spacer

LED 2 CIRCUIT BOARD

D9,10	LN417YP	LED
CN2-JM	YWB3BXHA	3 pin JackMale
M51	YWJ506PFM02	Spacer

LED 3 CIRCUIT BOARD

D11,12	LN417YP	LED
CN3-JM	YWB3BXHA	3 pin JackMale
M51	YWJ506PFM02	Spacer

PLAY BACK 1 CONNECTOR BOARD

CN1	YWSAST25SD02	Socket
CN2-5-JM	YW5275-6A	6 pin Jack Male

SYMBOL NO.	PART NO.	DESCRIPTION
PLAY BACK 2 CONNECTOR BOARD		
CN6	YWSAST25SD02	Socket
CN7-10-JM	YW5275-6A	6 pin Jack Male
PLAY BACK 3 CONNECTOR BOARD		
CN11	YWSAST25SD02	Socket
CN12-15-JM	YW5275-6A	6 pin Jack Male
AUX CONNECTOR BOARD		
CN16	YWSAST25SD02	Socket
CN17-20-JM	YW5275-6A	6 pin Jack Male
ACCESSORY PARTS/PACKAGING PARTS		
P1	YWSAST25P02	Plug
CN1	YWSAST25S02	Socket
M60	o YWXM2S2501	D Sub Hood
M61	YWS5RA0003B3	Knob
M62	YWS5RB0003A3	Knob
M63	YWR130-HR01	Knob
M64	YWR130-HR02	Knob
M65	o YWA7QA0555A4	Tag
M66	o YWA8QA0803AN	Operating Instruction
M67	o YWA8QA0804AN	Service Manual
M68	YWA8UA0001B2	Warranty Card
M69	YWA8RA0134AN	Printed Matters
M70	YWA8EA0089A4	Polyethylene Bag for Mixing Console
M71	XZB26X40C05	Polyethylene Bag for Printed
M73	o YWR8428PHA1A	Packaging

SYMBOL NO.	PART NO.	DESCRIPTION
MONO INPUT MODULES WU-8111		
MISCELLANEOUS		
ATT1	EVAJY1D15Y14	Attenuator
M100	o YWA5WA0644A1	Panel
M101	o YWA2KA0325A1	Chassis
M102	YWS5RA0008B3	Knob
M103	YWS5RA0009B3	Knob of White
M104	YWS5RB0002B4	Knob of Gray
M105	YWS5RB0010A3	Knob
M106	YWS5RC0002B4	Knob of Yellow
M107	YWS5RC0009B3	Knob
M108	YWS5RD0009A3	Knob
M109	YWS5RE0002B4	Knob of Orange(X3)
M110	YWS5RE0009B3	Knob of Grren
M111	YWS5RI0002A4	Knobof White(X6)
M112	YWR130-HR01	Knob
M113	YWB95WB01	Rubber Foot
M114	YWA2FA0084A4	Cushion
M115	YW0CB375	Cord Clamp
M116	YWVJR3	Cord Clamp
M119	YWA7QA1048A4	Main Label
M117	YWA2EA0055A4	Guide
M118	YWS5CA0001C4	Card Holder
MONO INPUT BOARD		
IC1	YWMC5712B	IC
IC2,3	YWNJM5532DD	IC
IC4	YWMC5713B	IC
IC5	YWNJM5532DD	IC
IC6	MS591	IC
IC7	YWM5201P	IC
Q1	2SC1318RS-TA	Transistor
D17-20	MA711A	Diode
R1	ER025CKF42R2	Metal 42.2 ohms 1/4W
R2,3	ERDS2TJ473	Carbon 47K ohms 1/8W
R4	ERO10TKF3001	Metal 3K ohms 1/8W
R5	ERDS2TJ473	Carbon 47K ohms 1/8W
R6,7	ER025CKF6801	Metal 6.8K ohms 1/4W
R8	ERDS2TJ104	Carbon 100K ohms 1/8W
R9	ERDS2TJ102	Carbon 1K ohms 1/8W
R10	ERQ14AJ220P	Fuse Resistor 22 ohms 1/4W
R11,12	ERO10TKF3001	Metal 3K ohms 1/8W
R13,14	ERO10TKF2201	Metal 2.2K ohms 1/8W
R15,16	ER010CKF2202	Metal 22K ohms 1/8W
R17,18	ER010TKF1822	Metal 18.2K ohms 1/8W
R19,20	ERDS2TJ473	Carbon 47K ohms 1/8W
R21,22	ER010CKF4701	Metal 4.7K ohms 1/8W
R23	ERO10TKF4990	Metal 499 ohms 1/8W

SYMBOL NO.	PART NO.	DESCRIPTION	
R24	ERO10TKF1962	Metal	19.6K ohms 1/8W
R27	ERDS2TJ334	Carbon	330K ohms 1/8W
R28	ERDS2TJ104	Carbon	100K ohms 1/8W
R29,30	ER010CKF4701	Metal	4.7K ohms 1/8W
R31	ERO10TKF3302	Metal	33K ohms 1/8W
R32,33	ERO10TKF6802	Metal	68K ohms 1/8W
R34-36	ERDS2TJ473	Carbon	47K ohms 1/8W
R37,38	ERO10TKF1003	Metal	100K ohms 1/8W
R39	ER010CKF1501	Metal	1/.5K ohms 1/8W
R40	ERO10TKF4123	Metal	412K ohms 1/8W
R41	ER010CKF1501	Metal	1.5K ohms 1/8W
R42	ERO10TKF4123	Metal	412K ohms 1/8W
R43,44	ERO10TKF2612	Metal	26.1K ohms 1/8W
R45,46	ERDS2TJ473	Carbon	47K ohms 1/8W
R47	ERDS2FJ101	Carbon	100 ohms 1/8W
R49-52	ER010CKF4701	Metal	4.7K ohms 1/8W
R53	ERDS2TJ104	Carbon	100K ohms 1/8W
R54	ER010CKF2202	Metal	22K ohms 1/8W
R55	ER010CKF1002	Metal	10K ohms 1/8W
R56	ERDS2TJ473	Carbon	47K ohms 1/8W
R57	ERDS2TJ223	Carbon	22K ohms 1/8W
R58	ERO10TKF9101	Metal	9.1K ohms 1/8W
R59	ERO10TKF1602	Metal	16K ohms 1/8W
R60	ERDS2TJ103	Carbon	10K ohms 1/8W
R61	ERDS2TJ470	Carbon	47 ohms 1/8W
R62-71	ER010CKF2202	Metal	22K ohms 1/8W
R72,73	ERDS2TJ104	Carbon	100K ohms 1/8W
R74,75	ERDS2TJ473	Carbon	47K ohms 1/8W
R76	ERDS2TJ333	Carbon	33K ohms 1/8W
R77	ERDS2FJ101	Carbon	100 ohms 1/8W
R78	ERDS2TJ333	Carbon	33K ohms 1/8W
R79,80	ERD25FJ222P	Carbon	2.2K ohms 1/4W
R81	ERDS2FJ101	Carbon	100 ohms 1/8W
R82	ER010CKF2202	Metal	22K ohms 1/8W
R83	ERDS2TJ822	Carbon	8.2K ohms 1/8W
R84	ERDS2TJ473	Carbon	47 ohms 1/8W
R85	ERO10TKF1003	Metal	100K ohms 1/8W
R86	ERO10TKF1201	Metal	1.2K ohms 1/8W
R87	ERD50FJ472	Carbon	4.7K ohms 1/2W
R88-91	ERDS2TJ473	Carbon	47K ohms 1/8W
R101,102	ER010CKF4701	Metal	4.7K ohms 1/8W
R103	ERO10TKF9101	Metal	9.1K ohms 1/8W
R104	ER010CKF1002	Metal	10K ohms 1/8W
R105	ERDS2TJ473	Carbon	47K ohms 1/8W
R106	ERDS2TJ472	Carbon	4.7K ohms 1/8W
R107,108	ERO10TKF2801	Metal	2.8K ohms 1/8W
R109,110	ER010CKF1501	Metal	1.5K ohms 1/8W
R111	ERO10TKF3602	Metal	36K ohms 1/8W
VR2,3	YWAVRA0027A4	Variable Resistor (X2)	150K ohms, 50K ohms
VR4	YWAVRA0075A4	Variable Resistor	
VR5	YWAVRA0033A4	Variable Resistor	5K ohms(C) 5K ohms(AC)
VR6,7	YWAVRA0026A4	Variable Resistor	20Kohms(A) X2
C1,2	ROA63T100	Electrolytic	10 µF 63V
C5	ECEA0JU471B	Electrolytic	470 µF 6.3V

SYMBOL NO.	PART NO.	DESCRIPTION	
C6,7	ROA25T330	Electrolytic	33 µF 25V
C8	ROA25T470	Electrolytic	47 µF 25V
C9,10	ROA25T100	Electrolytic	10 µF 25V
C11	ECEA1JU470	Electrolytic	47 µF 63V
C12	ECEA1JU100	Electrolytic	10 µF 63V
C13	ECEA1EU470	Electrolytic	47 µF 25V
C14,15	YWUP05S330JN	Ceramic	33 pF
C16,17	YWROA25T330	Electrolytic	33 µF 25V
C20,21	YWUP05S330JN	Ceramic	33 pF
C22,23	YWROA25T470	Electrolytic	47 µF 25V
C24	YWUP05S470JA	Ceramic	47 pF
C25	ECEA0JU471B	Electrolytic	470 µF 6.3V
C28	YWROA25T100	Electrolytic	10 µF 25V
C29	YWR0A25V221	Electrolytic	220 µF 25V
C30-32	ECQP1H473GZ	Plastic	0.047 µF 50V
C33	ROA25T470	Electrolytic	47 µF 25V
C34	ROA25T100	Electrolytic	10 µF 25V
C35	ECEA1EU100	Electrolytic	10 µF 25V
C36	ECQP1H823GZ	Plastic	0.082 µF 50V
C37	ECQP1H562GZ	Plastic	5600 pF 50V
C38	ROA25T470	Electrolytic	47 µF 25V
C39	YWR0A25V470	Electrolytic	47 µF 25V
C40	ROA25T100	Electrolytic	10 µF 25V
C41	YWUP05S330JN	Ceramic	33pF
C43	YWR0A25V101	Electrolytic	100 µF 25V
C44	ROA25T100	Electrolytic	10 µF 25V
C45	YWUP05S330JN	Ceramic	33 pF
C46	ECEA1ES220E	Electrolytic	22 µF 25V
C47	ROA25T330	Electrolytic	33 µF 25V
C48	ROA25T100	Electrolytic	10 µF 25V
C49	YWUP05S330JN	Ceramic	33 pF
C51	YWR0A25V221	Electrolytic	220 µF 25V
C52,53	ECEA1EU100	Electrolytic	10 µF 25V
C54	ECQB1H222JZ	Plastic	2200 pF
C55	ECEA0JU330B	Electrolytic	33 µF 6.3V
C56	ECEA1EU100	Electrolytic	10 µF 25V
C57	ECQV1H333JZ	Plastic	0.033 µF 50V
C58,59	ECEA1EU100	Electrolytic	10 µF 25V
C60	ECEA1HU010	Electrolytic	1 µF 50V
C61,62	ECEA1EU101	Electrolytic	100 µF 25V
C63-65	ECKR1H472ZF	Ceramic	4700pF 50V
C66,67	ECEA1EU471	Electrolytic	470 µF 25V
C68-70	ECKR1H472ZF	Ceramic	4700pF 50V
C71,72	ECEA1ES221	Electrolytic	220 µF 25V
C73	ECQB1H103JZ	Plastic	0.01 µF 50V
C81	ROA25T220	Electrolytic	22 µF 25V
C82	YWUP05S330JN	Ceramic	33 pF 50V
C83	ROA25T100	Electrolytic	10 µF 25V
L1,2	YWBF45HW3560	Coil	
SW1	YWASRA0006A4	Rotary Switch	
SW2-5	YWSUN102GSND	Push Switch	
SW6	YWSUN104GSND	Push Switch	
SW7-11	YWSUN102GSND	Push Switch	
SW12,13	YWAT1D6F3	Toggle Switch	

SYMBOL NO.	PART NO.	DESCRIPTION
SW15,16	YWSSS322N2	Slide Switch
SW17	YWSSP22MB3H8	Slide Switch
F1,2	UN10015	Current Fuse
J1	YWJM15M0R8	JamperResistor
M1	YWA2QA0047A4	Electrode

RUN/PEAK INDICATOR CIRCUIT BOARD

D23	LN117WP23	LED
M125	YWA3CA0052A4	Parts Holder

CHANNEL SWITCH CIRCUIT BOARD

D25	LN317GP	LED
CN1-JM	EMCS0550L	5pin Jack Male
M125	YWA3CA0052A4	Parts Holder

SOLO SWITCH CIRCUIT BOARD

D24	LN217RP	LED
SW14	YWSUN102HSN	Push Switch
M1	YWA3CA0052A4	Parts Holder

TAPE MONITOR GROUP OUTPUT MODULES WU-8112

MISCELLANEOUS

ATT1	EVAJY1D15Y14	Attenuator
M200	o YWA5WA0645A1	Panel
M201	o YWA2KA0326A1	Chassis
M202	YWS5RA0008B3	Knob(X9)
M203	YWS5RA0010A3	Knob(White)
M204	YWS5RB0009A3	Knob(Gray X5)
M205	YWS5RD0009A3	Knob(Green X4)
M206	YWS5RE0002B4	Knob(Orange)
M207	YWS5RI0002A4	Knob(White)
M208	YWR130-HR02	Knob(Red)
M209	YWB95WB01	Rubber Foot
M210	YW0CB375	Cord Clamp
M211	YWVJR3	Cord Clamp
M212	YWA2EA0055A4	Guide
M213	YWS5CA0001C4	Card Holder
M214	o YWA7QA1049A4	Main Label

TAPE MONITOR CIRCUIT BOARD

SYMBOL NO.	PART NO.	DESCRIPTION	
IC1	YWUPC4570C	IC	
IC2	YWMC5762	IC	
IC3-5	YWUPC4570C	IC	
Q1,2	2SC1844-FE	Transistor	
Q3	2SC1318RS-TA	Transistor	
D38-43	MA711A	Diode	
D44-46	MA165	Diode	
R1	ERO10TKF7321	Metal	320 ohms 1/8W
R2	ERO10TKF6201	Metal	6.2K ohms 1/8W
R3,4	ER010CKF1001	Metal	1K ohms 1/8W
R5	ER010CKF1502	Metal	1.5K ohms 1/8W
R6	ER010CKF1002	Metal	10K ohms 1/8W
R7	ER010CKF1502	Metal	1.5K ohms 1/8W
R8	ER010CKF1002	Metal	10K ohms 1/8W
R9	ERD50FJ1R0P	Carbon	1 ohms 1/2W
R10	ER010CKF2002	Metal	20K ohms 1/8W
R11	ERDS2TJ474	Carbon	470K ohms 1/8W
R12,13	ER010CKF4701	Metal	4.7K ohms 1/8W
R14	ERDS2FJ331	Carbon	330 ohms 1/8W
R15,16	ERDS2FJ101	Carbon	1K ohms 1/8W
R17	ERO10TKF3571	Metal	3.57K ohms 1/8W
R18,19	ER010CKF2001	Metal	2K ohms 1/8W
R20	ERO10TKF1102	Metal	11K ohms 1/8W
R21	ER010CKF1002	Metal	10K ohms 1/8W
R22	ERDS2TJ223	Carbon	22K ohms 1/8W
R23	ER010CKF1002	Metal	10K ohms 1/8W
R24	ERDS2TJ473	Carbon	47K ohms 1/8W
R25	ERDS2FJ101	Carbon	100 ohms 1/8W
R27	ERDS2TJ104	Carbon	100K ohms 1/8W
R28	ER010CKF2491	Metal	2.49K ohms 1/8W
R29	ERDS2FJ101	Carbon	1K ohms 1/8W
R30	ERDS2TJ752	Carbon	7.5K ohms 1/8W
R31	ERDS2TJ103	Carbon	10K ohms 1/8W
R32	ERDS2TJ473	Carbon	47K ohms 1/8W
R33	ERDS2TJ100	Carbon	10 ohms 1/8W
R34	ERDS2TJ330	Carbon	33 ohms 1/8W
R35	ERDS2TJ103	Carbon	10K ohms 1/8W
R36	ERO10TKF3832	Metal	3.83K ohms 1/8W
R37	ER010CKF1002	Metal	10K ohms 1/8W
R38	ERD50FJ1R0P	Carbon	1 ohms 1/2W
R39,40	ER010CKF2202	Metal	22K ohms 1/8W
R41	ERO10TKF7321	Metal	7.32K ohms 1/8W
R42	ERO10TKF6201	Metal	6.2K ohms 1/8W
R43,44	ER010CKF1001	Metal	1K ohms 1/8W
R45	ER010CKF1502	Metal	15K ohms 1/8W
R46	ER010CKF1002	Metal	10K ohms 1/8W
R47	ER010CKF1502	Metal	15K ohms 1/8W
R48	ER010CKF1002	Metal	10K ohms 1/8W
R49	ERDS2TJ473	Carbon	47K ohms 1/8W
R50-53	ER010CKF2202	Metal	22K ohms 1/8W
R54	-ERO10TKF7321	Metal	7.32K ohms 1/8W

SYMBOL NO.	PART NO.	DESCRIPTION	
R55	-ERO10TKF6201	Metal	6.2K ohms 1/8W
R56,57	ER010CKF1001	Metal	1K ohms 1/8W
R58	ER010CKF1502	Metal	15K ohms 1/8W
R59	ER010CKF1002	Metal	10K ohms 1/8W
R60	ER010CKF1502	Metal	15K ohms 1/8W
R61	ER010CKF1002	Metal	10K ohms 1/8W
R62	ERDS2TJ473	Carbon	47K ohms 1/8W
R63-66	ER010CKF2202	Metal	22K ohms 1/8W
R67	ERO10TKF7321	Metal	7.32K ohms 1/8W
R68	ERO10TKF6201	Metal	6.2K ohms 1/8W
R69,70	ER010CKF1001	Metal	1K ohms 1/8W
R71	ER010CKF1502	Metal	15K ohms 1/8W
R72	ER010CKF1002	Metal	10K ohms 1/8W
R73	ER010CKF1502	Metal	15K ohms 1/8W
R74	ER010CKF1002	Metal	10K ohms 1/8W
R75	ERDS2TJ473	Carbon	47K ohms 1/8W
R76-79	ER010CKF2202	Metal	22K ohms 1/8W
R80	ERO10TKF7321	Metal	7.32K ohms 1/8W
R81	ERO10TKF6201	Metal	6.2K ohms 1/8W
R82,83	ER010CKF1001	Metal	1K ohms 1/8W
R84	ER010CKF1502	Metal	15K ohms 1/8W
R85	ER010CKF1002	Metal	10K ohms 1/8W
R86	ER010CKF1502	Metal	15K ohms 1/8W
R87	ER010CKF1002	Metal	10K ohms 1/8W
R88	ERDS2TJ473	Carbon	47K ohms 1/8W
R89-92	ER010CKF2202	Metal	22K ohms 1/8W
R93	ERO10TKF1102	Metal	11K ohms 1/8W
R94	ERD25FJ122P	Carbon	1.2K ohms 1/4W
R95	ERDS2TJ752	Carbon	7.5K ohms 1/8W
R96	ERDS2FJ101	Carbon	100 ohms 1/8W
R97-102	ERDS2TJ473	Carbon	47K ohms 1/8W
R103	ERQ12AJ100	Fuse Resistor	10 ohms 1/2W
R104	ERDS2TJ223	Carbon	22K ohms 1/8W
R105-107	ERDS2TJ122	Carbon	1.2K ohms 1/8W
R108,109	ERDS2TJ103	Carbon	10K ohms 1/8W
R110	ERDS2TJ100	Carbon	10 ohms 1/8W
R111,112	ERDS2TJ472	Carbon	4.7K ohms 1/8W
R113	ERDS2TJ102	Carbon	10K ohms 1/8W
R114	ERDS2TJ471	Carbon	10K ohms 1/8W
VR1	YWSVRA0004A4	Variable Resistor	20K ohms(A)
VR2-10	YWSVRA0002B4	Variable Resistor	5Kohms(A) 20Kohms(A) 20K ohms(C)
C1,2	ROA25T100	Electrolytic	10 µF 25V
C3,4	YWUP05B101KN	Ceramic	100 pF 50V
C5,6	YWUP05S220JN	Ceramic	22 pF 50V
C7	ROA25T330	Electrolytic	33 µF 25V
C8	YWUP05B331KN	Ceramic	330 pF 50V
C9	YWUP05S560JN	Ceramic	56 pF 50V
C10	YWR0A25V221	Electrolytic	220 µF 25V
C11	ECQB1H103JZ	Plastic	0.01µF 50V
C12	ROA25T100	Electrolytic	10 µF 25V
C13	YWUP05S330JN	Ceramic	33 pF 50V
C14,15	ROA25T330	Electrolytic	33 µF 25V
C16	ROA25T100	Electrolytic	10 µF 25V
C17	ECEA1EU470	Electrolytic	47 µF 50V

SYMBOL NO.	PART NO.	DESCRIPTION	
C18	ROA25T330	Electrolytic	33 µF 25V
C19	YWR0A25V221	Electrolytic	220 µF 25V
C20	ROA25T330	Electrolytic	33 µF 25V
C21,22	YWR0A25V221	Electrolytic	220 µF 25V
C25,26	ECKF1H103ZF	Ceramic	0.01µF 50V
C27	ROA25T100	Electrolytic	10 µF 25V
C28	YWUP05S330JN	Ceramic	33 pF 50V
C29	ROA25T330	Electrolytic	33 µF 25V
C30,31	ROA25T100	Electrolytic	10 µF 25V
C32,33	YWUP05B101KN	Ceramic	100 pF 50V
C34,35	YWUP05S330JN	Ceramic	33 pF 50V
C36	ROA25T330	Electrolytic	33 µF 25V
C37,38	ROA25T100	Electrolytic	10 µF 25V
C39,40	YWUP05B101KN	Ceramic	100 pF 50V
C41,42	YWUP05S330JN	Ceramic	33 pF 50V
C43	ROA25T330	Electrolytic	33 µF 25V
C44,45	ROA25T100	Electrolytic	10 µF 25V
C46,47	YWUP05B101KN	Ceramic	100 pF 50V
C48,49	YWUP05S330JN	Ceramic	33 pF 50V
C50	ROA25T330	Electrolytic	33 µF 25V
C51,52	ROA25T100	Electrolytic	10 µF 25V
C53,54	YWUP05B101KN	Ceramic	100 pF 50V
C55,56	YWUP05S330JN	Ceramic	33 pF 50V
C57	ROA25T330	Electrolytic	33 µF 25V
C58	ECQB1H332JZ	Plastic	3300 pF 50V
C59-62	ECEA1ES221	Electrolytic	220 µF 25V
C63,64	ECKR1H472ZF	Ceramic	4700 pF 50V
C69,70	ECEA1EU101	Electrolytic	100 µF 25V
C71,72	ECKR1H472ZF	Ceramic	4700 pF 50V
C73	ECEA1EU101	Electrolytic	100 µF 25V
C74	ECKR1H472ZF	Ceramic	4700 pF 50V
C75	YWUP05B151KN	Ceramic	150 pF 50V
C76	ECQB1H103JZ	Plastic	0.01µF 50V
C80	ECQV1H104JZ	Plastic	0.1µF 50V
L1	YWBF45HW3560	Coil	
SW1-4	YWSUN102GSND	Push Switch	
RL1	YWAG204344	Relay	
F1,2	UN10015	Current Fuse	
J1	YWJM15M0R8	Jamper Resistor	
M1	YWA2QA0047A4	Electrode	

SOLO SWITCH CIRCUIT BOARD

D37	LN217RP	LED
SW5	YWSUN102HSN	Push Switch
M220	YWA3CA0052A4	LED Holder

SYMBOL NO.	PART NO.	DESCRIPTION	
MASTER MODULES WU-8113			
MISCELLANEOUS			
ATT1	EVAJY1D15Y14	Attenuator	
M300	o YWA5WA0646A1	Panel	
M301	o YWA2KA0327A1	Chassis	
M302	YWS5RA0003B3	Slide Knob(Gray)	
M303	YWS5RA0010A3	Knob(Blue X2)	
M304	YWS5RB0001C3	Knob(Green)	
M305	YWS5RB0002B4	Push Knob(X4)	
M306	YWS5RB0010A3	Knob(Gray)	
M307	YWS5RD0010A3	Knob(X2)	
M308	YWS5RE0002B4	Push Knob(X4)	
M309	YWS5RI0002A4	Push Knob(X4)	
M310	YWB95WB01	Rubber Foot	
M312	YW0CB375	Cord Clamp	
M313	YWVJR3	Cord Clamp	
M314	YWA2EA0055A4	Guide	
M315	YWS5CA0001C4	Card Holder	
M316	o YWA7QA1050A4	Main Label	
MASTER CIRCUIT BOARD			
IC1	YWUPC4570C	IC	
IC2	YWMC5762	IC	
IC3	YWUPC4570C	IC	
IC4	YWMC5762	IC	
Q1-4	2SC1844-FE	Transistor	
Q5-7	2SC1318-RS	Transistor	
D9-14	MA165	Diode	
D15-24	MA711A	Diode	
R1	ERO10TKF7321	Metal	7.32K ohms 1/8W
R2	ERO10TKF6201	Metal	6.2K ohms 1/8W
R3,4	ER010CKF1001	Metal	1K ohms 1/8W
R5,6	ER010CKF1502	Metal	15K ohms 1/8W
R7-15	ER010CKF2202	Metal	22K ohms 1/8W
R16	ERD50FJ122	Carbon	1.2K ohms 1/8W
R17	ERDS2FJ101	Carbon	100 ohms 1/8W
R18	ERDS2TJ752	Carbon	7.5K ohms 1/8W
R19	ERO10TKF7321	Metal	7.32K ohms 1/8W
R20	ERO10TKF6201	Metal	6.2K ohms 1/8W
R21,22	ER010CKF1001	Metal	1K ohms 1/8W
R23,24	ER010CKF1502	Metal	15K ohms 1/8W
R25-27	ER010CKF1002	Metal	10K ohms 1/8W
R28	ERDS2TJ474	Carbon	470K ohms 1/8W
R29	ER010CKF4701	Metal	4.7K ohms 1/8W
R30	ERDS2FJ331	Carbon	330 ohms 1/8W
R31,32	ERDS2FJ101	Carbon	100 ohms 1/8W
R33	ERO10TKF3571	Metal	3.57K ohms 1/8W
R34	ER010CKF4701	Metal	4.7K ohms 1/8W

SYMBOL NO.	PART NO.	DESCRIPTION	
R35,36	ER010CKF2001	Metal	2K ohms 1/8W
R37	ERO10TKF1102	Metal	11K ohms 1/8W
R38	ER010CKF1002	Metal	10K ohms 1/8W
R39	ERO10TKF1102	Metal	11K ohms 1/8W
R40	ER010CKF2491	Metal	2.49K ohms 1/8W
R41	ERDS2TJ122	Carbon	1.2K ohms 1/8W
R42,43	ERDS2TJ103	Carbon	10K ohms 1/8W
R44,45	ERDS2TJ122	Carbon	1.2K ohms 1/8W
R46	ERD50FJ122	Carbon	1.2K ohms 1/2W
R47	ERDS2FJ101	Carbon	100 ohms 1/8W
R48	ERDS2TJ752	Carbon	7.5K ohms 1/8W
R49	ERDS2TJ122	Carbon	1.2K ohms 1/8W
R50	ERDS2TJ223	Carbon	22K ohms 1/8W
R51	ERDS2TJ224	Carbon	220K ohms 1/8W
R52	ERDS2TJ472	Carbon	4.7K ohms 1/8W
R53	ERD50FJ122	Carbon	1.2K ohms 1/8W
R54	ERDS2FJ101	Carbon	100 ohms 1/8W
R55	ERQ12AJ220P	Fuse Resistor	22 ohms 1/2W
R56	ERDS2TJ474	Carbon	470K ohms 1/8W
R57	ER010CKF4701	Metal	4.7K ohms 1/8W
R58	ERDS2FJ331	Carbon	330 ohms 1/8W
R59,60	ERDS2FJ101	Carbon	100 ohms 1/8W
R61	ERO10TKF3571	Metal	3.57K ohms 1/8W
R62	ER010CKF4701	Metal	4.7K ohms 1/8W
R63,64	ER010CKF2001	Metal	2K ohms 1/8W
R65	ERO10TKF1102	Metal	11K ohms 1/8W
R66	ERDS2TJ223	Carbon	22K ohms 1/8W
R67	ER010CKF4701	Metal	4.7K ohms 1/8W
R68	ER010CKF1002	Metal	10K ohms 1/8W
R69,70	ERDS2TJ103	Carbon	10K ohms 1/8W
R71,72	ERDS2TJ122	Carbon	1.2K ohms 1/8W
R73	ERDS2TJ473	Carbon	47K ohms 1/8W
R74	ERDS2TJ472	Carbon	4.7K ohms 1/8W
R75	-ERO10TKF1742	Metal	17.4K ohms 1/8W
R76	ERD50FJ122	Carbon	1.2K ohms 1/8W
R77	ERDS2FJ101	Carbon	100 ohms 1/8W
R78	ERDS2TJ752	Carbon	7.5K ohms 1/8W
R79	ERDS2TJ122	Carbon	1.2K ohms 1/8W
R80	ERDS2TJ223	Carbon	22K ohms 1/8W
R81-90	ERDS2TJ473	Carbon	47K ohms 1/8W
R91	ERDS2TJ223	Carbon	22K ohms 1/8W
R95	ER010CKF1002	Metal	10K ohms 1/8W
R96,97	ERDS2TJ104	Carbon	100K ohms 1/8W
R98	ERDS2TJ473	Carbon	47K ohms 1/8W
R99,100	ERDS2TJ100	Carbon	10 ohms 1/8W
R102	ERDS2TJ471	Carbon	470 ohms 1/8W
R103	ERDS2TJ102	Carbon	1K ohms 1/8W
VR1	YWSVRA0004A4	Variable Resistor	20K ohms
VR2	YWAVRA0033A4	Variable Resistor	5K ohms(C) 5K ohms(AC)
VR3-5	YWSVRA0004A4	Variable Resistor	20K ohms
C1,2	ROA25T100	Electrolytic	10 µF 25V
C3,4	YWUP05B101KN	Ceramic	100 pF 50V
C5	YWR0A25V470	Electrolytic	47 µF 25V
C6	ROA25T100	Electrolytic	10 µF 25V

SYMBOL NO.	PART NO.	DESCRIPTION	
C7	YWR0A25V101	Electrolytic	100 µF 25V
C8,9	ROA25T100	Electrolytic	10 µF 25V
C10,11	YWUP05B101KN	Ceramic	100 pF 50V
C12,13	YWUP05S330JN	Ceramic	33 pF 50V
C14	YWUP05B331KN	Ceramic	330 pF 50V
C15	YWR0A25V221	Electrolytic	220 µF 25V
C16	YWUP05S560JN	Ceramic	56 pF 50V
C17	ROA25T330	Electrolytic	33 µF 25V
C18	ROA25T100	Electrolytic	10 µF 25V
C19	ECEA1EU470	Electrolytic	47 µF 25V
C20	ROA25T330	Electrolytic	33 µF 25V
C21,22	YWR0A25V221	Electrolytic	220 µF 25V
C23,24	ECKF1H103ZF	Ceramic	0.01µF 50V
C25	ECQV1H333JZ	Plastic	0.033µF 50V
C26	YWUP05B151KN	Ceramic	150 pF 50V
C27	ECQV1H333JZ	Plastic	0.033µF 50V
C28	ECKR1H472ZF	Ceramic	4700 pF 50V
C29	ECEA1EU101	Electrolytic	100 µF 25V
C30	ECQV1H333JZ	Plastic	0.033µF 50V
C33	YWUP05B331KN	Ceramic	330 pF 50V
C34	YWR0A25V221	Electrolytic	220 µF 25V
C35	YWUP05S560JN	Ceramic	56 pF 50V
C36,37	ROA25T330	Electrolytic	33 µF 25V
C38	ECEA1EU330	Electrolytic	33 µF 25V
C39	YWUP05S330JN	Ceramic	33 pF 50V
C40,41	ROA25T330	Electrolytic	33 µF 25V
C42,43	YWR0A25V221	Electrolytic	220 µF 25V
C44,45	ECKF1H103ZF	Ceramic	0.01µF 50V
C46	YWUP05B151KN	Ceramic	150 pF 50V
C47,48	ECEA1EU101	Electrolytic	100 µF 25V
C49,50	ECEA1EU471	Electrolytic	470 µF 25V
C51-54	ECEA1EU101	Electrolytic	100 µF 25V
C55,56	ECEA1EU471	Electrolytic	470 µF 25V
C57	ECQB1H103JZ	Plastic	0.01µF 50V
C60	ECQV1H333JZ	Plastic	0.033µF 50V
C62-65	ECKR1H472ZF	Ceramic	4700 pF 50V
C68,69	ECQV1H104JZ	Plastic	0.1µF 50V
L1,2	YWBF45HW3560	Coil	
SW1-8	YWSUN102GSND	Push Switch	
SW10	YWSSS322N2	Slide Switch	
RL1,2	YWAG204344	Relay	
F1,2	UN10020	Current Fuse	
J1	ERDS2TC0	Jamper Resistor	
M1	YWA2QA0047A4	Electrode	

EFFECT SOLO INDICATOR CIRCUIT BOARD

D27	LN217RP	LED
CN-1JM	EMCS0550L	5 pin Jack Male
M320	YWA3CA0052A4	LED Holder

SYMBOL NO.	PART NO.	DESCRIPTION

EFFECT RETURN SOLO INDICATOR BOARD

D25	LN217RP	LED
CN-1JM	EMCS0550L	5 pin Jack Male
M320	YWA3CA0052A4	LED Holder

MASTER CHANNEL INDICATOR BOARD

D28	LN317GP	LED
CN-1JM	EMCS0550L	5 pin Jack Male
M320	YWA3CA0052A4	LED Holder

SOLO SWITCH BOARD

D26	LN217RP	LED
SW9	YWSUN102HSN	Push Switch
M320	YWA3CA0052A4	LED Holder

MONITOR/MONO MODULES WU-8114

MISCELLANEOUS

M400	o YWA5WA0647A1	Panel
M401	o YWA2KA0328A1	Chassis
M402	YWS5RA0001B3	Knob(White)
M403	YWS5RA0010A3	Knob(White X4)
M404	YWS5RB0002B4	Knob(Gray X2)
M405	YWS5RD0002B4	Knob(Blue X4)
M406	YWS5RI0002A4	Knob(White X6)
M407	YWB95WB01	Rubber Foot
M408	YWS2FA0002A4	Cushion
M409	YW0CB375	Cord Clamp
M410	YWVJR3	Cord Clamp
M411	YWA2EA0055A4	Guide
M412	YWS5CA0001C4	Card Holder
M415	o YWA7QA1051A4	Main Label

MONITOR/MONO CIRCUIT BOARD

IC1-5	YWUPC4570C	IC	
IC6-8	MN6631A	IC	
Q1-4	2SC1844-FE	Transistor	
D1,2	MA711A	Diode	
R1,2	ER010CKF2202	Metal	22K ohms 1/8W

SYMBOL NO.	PART NO.	DESCRIPTION	
R3	ERO10TKF1102	Metal	11K ohms 1/8W
R4,5	ER010CKF2202	Metal	22K ohms 1/8W
R6,7	ERDS2TJ104	Carbon	100K ohms 1/8W
R8	ERDS2TJ473	Carbon	47K ohms 1/8W
R9,10	ERDS2TJ104	Carbon	100K ohms 1/8W
R11	ERDS2TJ473	Carbon	47K ohms 1/8W
R12	ERDS2TJ152	Carbon	1.5K ohms 1/8W
R13	ERDS2FJ101	Carbon	100 ohms 1/8W
R14	ERDS2TJ152	Carbon	1.5K ohms 1/8W
R15	ERDS2FJ101	Carbon	100 ohms 1/8W
R16	ERDS2TJ753	Carbon	75K ohms 1/8W
R17,18	ERDS2TJ104	Carbon	100K ohms 1/8W
R19	ERDS2TJ124	Carbon	120K ohms 1/8W
R20	ERDS2TJ224	Carbon	220K ohms 1/8W
R21	ERDS2TJ104	Carbon	100K ohms 1/8W
R22	ERD25FJ222P	Carbon	2.2K ohms 1/8W
R23,24	ERDS2TJ104	Carbon	100K ohms 1/8W
R25	ERDS2TJ473	Carbon	47K ohms 1/8W
R26,27	ERDS2TJ104	Carbon	100K ohms 1/8W
R28	ERDS2TJ473	Carbon	47K ohms 1/8W
R29	ERDS2TJ753	Carbon	75K ohms 1/8W
R30	ERDS2TJ104	Carbon	100K ohms 1/8W
R31	ERDS2TJ154	Carbon	150K ohms 1/8W
R32	ERDS2TJ334	Carbon	330K ohms 1/8W
R33	ERDS2TJ224	Carbon	220K ohms 1/8W
R34	ERO10TKF1742	Metal	17.4K ohms 1/8W
R35	ER010CKF2202	Metal	22K ohms 1/8W
R36	ER010CKF4702	Metal	47K ohms 1/8W
R37	ERDS2TJ473	Carbon	47K ohms 1/8W
R38	ERO10TKF1742	Metal	17.4K ohms 1/8W
R39,40	ER010CKF2202	Metal	22K ohms 1/8W
R41	ERDS2TJ473	Carbon	47K ohms 1/8W
R42	ERDS2TJ753	Carbon	75K ohms 1/8W
R43	ERDS2TJ474	Carbon	470K ohms 1/8W
R44	ERDS2TJ334	Carbon	330K ohms 1/8W
R45	ERDS2TJ104	Carbon	100K ohms 1/8W
R46	ERDS2TJ154	Carbon	150K ohms 1/8W
R47	ERDS2TJ100	Carbon	10 ohms 1/8W
R48	ERDS2TJ470	Carbon	47 ohms 1/8W
R49	ERDS2FJ101	Carbon	100 ohms 1/8W
R50-52	ERDS2TJ473	Carbon	47K ohms 1/8W
VR1	YWSVRA0004A4	Variable Resistor	20K ohms(A)
VR2,3	YWSVRA0005A4	Variable Resistor	20K ohms(A)
VR4	YWSVRA0004A4	Variable Resistor	20K ohms(A)
VR5	YWSVRA0005A4	Variable Resistor	20K ohms(A)
C1	ROA25T100	Electrolytic	10 µF 25V
C2	YWUP05S330JN	Ceramic	33 pF 50V
C3	YWUP05S220JN	Ceramic	22 pF 50V
C4	ROA25T220	Electrolytic	22 µF 25V
C5	ROA25T100	Electrolytic	10 µF 25V
C6	ROA25T220	Electrolytic	22 µF 25V
C7	ROA25T100	Electrolytic	10 µF 25V
C8	ROA25T220	Electrolytic	22 µF 25V
C9	ROA25T100	Electrolytic	10 µF 25V
C10	ROA25T220	Electrolytic	22 µF 25V

SYMBOL NO.	PART NO.	DESCRIPTION	
C11	ROA25T100	Electrolytic	10 µF 25V
C12	ROA25T220	Electrolytic	22 µF 25V
C13	ECQV1H104JZ	Plastic	0.1µF 50V
C14	ROA25T100	Electrolytic	10 µF 25V
C15	YWUP05S220JN	Ceramic	22 pF 50V
C16,17	ROA25T220	Electrolytic	22 µF 25V
C18	YWUP05S220JN	Ceramic	22 pF 50V
C19	ROA25T220	Electrolytic	22 µF 25V
C20	ROA25T100	Electrolytic	10 µF 25V
C21,22	YWUP05S220JN	Ceramic	22 pF 50V
C23	ROA25T220	Electrolytic	22 µF 25V
C24,25	ECEA1EU100	Electrolytic	10 µF 25V
C26,27	ECEA1EU471	Electrolytic	470 µF 50V
C28-39	ECKR1H472ZF	Ceramic	4700 pF 50V
C40	YWR0A25V220	Electrolytic	22 µF 25V
C41	ECQV1H104JZ	Plastic	0.1µF 50V
SW1	YWSUN602GLN	Push Switch	
SW2	YWSUF40NS	Push Switch	
SW3	YWSUF20LRNS	Push Switch	
F1,2	UN10015	Current Fuse	
J1	ERDS2TC0	JamperResistor	

SOLO INDICATOR BOARD

D3	LN217RP	LED
CN-1JM	EMCS0450L	4 pin Jack Male
M420	YWA3CA0052A4	LED Holder

HEADPHONE AMPLIFIER CIRCUIT BOARD

IC1	YWUPC4570C	IC	
Q1	2SC1318-RS	Transistor	
Q2	2SA720-RS	Transistor	
Q3	2SD1276A-QR	Transistor	
Q4	2SB950A-QR	Transistor	
Q5	2SC1318-RS	Transistor	
Q6	2SA720-RS	Transistor	
Q7	2SD1276A-QR	Transistor	
Q8	2SB950A-QR	Transistor	
D1,2	MA165	Diode	
D3	MA156	Diode	
D4,5	MA165	Diode	
D6	MA156	Diode	
D7,8	MA711A	Diode	
R1	ERDS2TJ103	Carbon	10K ohms 1/8W
R2	ERDS2TJ332	Carbon	3.3K ohms 1/8W
R3	ERDS2TJ103	Carbon	10K ohms 1/8W
R4,5	ERDS2TJ471	Carbon	470 ohms 1/8W
R6	ERDS2TJ103	Carbon	10K ohms 1/8W

SYMBOL NO.	PART NO.	DESCRIPTION	
R7,8	ERD25FJ3R3P	Carbon	3.3 ohms 1/8W
R9	ERDS2TJ822	Carbon	8.2K ohms 1/8W
R10	ERDS2TJ122	Carbon	1.2K ohms 1/8W
R11	ERDS2TJ103	Carbon	10K ohms 1/8W
R12	ERDS2TJ332	Carbon	3.3K ohms 1/8W
R13	ERDS2TJ103	Carbon	10K ohms 1/8W
R14,15	ERDS2TJ471	Carbon	470 ohms 1/8W
R16	ERDS2TJ103	Carbon	10K ohms 1/8W
R17,18	ERD25FJ3R3P	Carbon	3.3 ohms 1/8W
R19	ERDS2TJ822	Carbon	8.2K ohms 1/8W
R20	ERDS2TJ122	Carbon	1.2K ohms 1/8W
R21	ERD25FJ4R7P	Carbon	4.7 ohms 1/8W
R22	ERDS2TJ103	Carbon	10K ohms 1/8W
R23	ERD25FJ4R7P	Carbon	4.7 ohms 1/8W
R24	ERDS2TJ103	Carbon	10K ohms 1/8W
R25,26	ERDS2TJ473	Carbon	47K ohms 1/8W
C1	YWR0A25V100	Electrolytic	10 µF 25V
C2	YWUP05B101KN	Ceramic	100 pF 50V
C3-5	YWUP05B151KN	Ceramic	100 pF 50V
C6	YWUP05S470JN	Ceramic	47 pF 50V
C7	ECEA1EU471	Electrolytic	470 µF 25V
C11	YWR0A25V100	Electrolytic	10 µF 25V
C12	YWUP05B101KN	Ceramic	100 pF 50V
C13-15	YWUP05B151KN	Ceramic	150 pF 50V
C16	YWUP05S470JN	Ceramic	47 pF 50V
C17-19	ECEA1EU471	Electrolytic	470 µF 25V
C20,21	ECQV1H473JZ	Plastic	0.047 µF 50V
F1,2	UN10015	Current Fuse	
JK1	HLJ306-1-2	Jack	
CN1	YWS6BXHA	6 pin Connector	
M425	o YWA2SA0961A4	Mounting Angle	

TALK-BACK/OSCILATOR MODULES WU-8115

MISCELLANEOUS

CN500	o YWFM-3-31	3 pin Connector
M500	o YWA5WA0648A1	Panel
M501	o YWA2KA0329A1	Chassis
M502	YWS5RA0010A3	Knob
M503	YWS5RB0002B4	Knob(Gray)
M504	YWS5RD0002B4	Knob
M505	YWS5RI0002A4	Knob(White X7)
M506	YWB95WB01	Rubber Foot
M507	YW0CB375	Cord Clamp
M508	P-20	Cord Clamp
M509	YWVJR3	Cord Clamp
M510	YWS5CA0001C4	Card Holder
M512	o TWA7QA1052A4	Main Label

T.B/OSC CIRCUIT BOARD

SYMBOL NO.	PART NO.	DESCRIPTION	
IC1-3	YWUPC4570C	IC	
D1,2	YWHZS3R0EB2	Diode	
D6,7	0A91	Diode	
D8,9	MA711A	Diode	
R1	ER010CKF2202	Metal	22K ohms 1/8W
R2	ERDS2TJ512	Carbon	5.1K ohms 1/8W
R3	ERDS2TJ393	Carbon	39K ohms 1/8W
R4	ERDS2TJ751	Carbon	750 ohms 1/8W
R5	ER010CKF1502	Metal	15K ohms 1/8W
R6,7	ERDS2TJ104	Carbon	100K ohms 1/8W
R8	ERDS2TJ223	Carbon	22K ohms 1/8W
R9	ERDS2TJ153	Carbon	15K ohms 1/8W
R10,11	ERDS2TJ114	Carbon	110K ohms 1/8W
R12	ERDS2TJ473	Carbon	47K ohms 1/8W
R13	ERDS2TJ220	Carbon	22 ohms 1/8W
R14	ERDS2TJ512	Carbon	5.1K ohms 1/8W
R15	ERDS2TJ104	Carbon	100K ohms 1/8W
R16	ERDS2TJ102	Carbon	1K ohms 1/8W
R17,18	ERDS2TJ473	Carbon	47K ohms 1/8W
R19	ER010CKF1502	Metal	15K ohms 1/8W
R20	ER010CKF4702	Metal	47K ohms 1/8W
R21	ER010CKF2202	Metal	22K ohms 1/8W
R22	ERDS2TJ222	Carbon	2.2K ohms 1/8W
R23,24	ERDS2FJ101	Carbon	100 ohms 1/8W
R25-33	ERO10TKF3482	Metal	34.8K ohms 1/8W
R34,35	ERDS2TJ473	Carbon	47K ohms 1/8W
R36	ERDS2FJ101	Carbon	100 ohms 1/8W
VR1,2	YWSVRA0004A4	Variable Resistor	20K ohms
VR3	YWSR19R22KB	Variable Resistor	22K ohms
VR4	YWSR19R4.7KB	Variable Resistor	4.7K ohms
C1	YWUP05S220JN	Ceramic	22 pF 50V
C2,3	ECQP1H183GZ	Plastic	0.018µF 50V
C4,5	ECQP1H224GZ	Plastic	0.22µF 50V
C6	ECEA1EU100	Electrolytic	10 µF 25V
C7	YWUP05S220JN	Ceramic	22 pF 50V
C8	ECEA1EU100	Electrolytic	10 µF 25V
C9	ROA25T100	Electrolytic	10 µF 25V
C10	UP05S5R6KA	Ceramic	5.6 pF 50V
C11	YWR0A25V101	Electrolytic	100 µF 25V
C12	ROA25T220	Electrolytic	22 µF 25V
C15	UP05S5R6KA	Ceramic	5.6 pF 50V
C16	ECEA1EU101	Electrolytic	100 µF 25V
C17,18	ROA25T100	Electrolytic	10 µF 25V
C19	YWUP05S100JN	Ceramic	10 pF 50V
C20	ROA25T100	Electrolytic	10 µF 25V
C21,24	ECQV1H333JZ	Plastic	0.033 µF 25V
C25,26	ECEA1EU101	Electrolytic	100 µF 25V
C27,28	YWUP05B102KN	Ceramic	1000 pF 50V
SW1	YWSUF30NS	Push Switch	
SW2	YWSUN102GNND	Push Switch	
SW3-8	YWSUN102GSND	Push Switch	

SYMBOL NO.	PART NO.	DESCRIPTION
F1,2	UN10010	Current Fuse
CN1	YWB4BXHA	4 pin Connector
M1	YWA2QA0047A4	Electrode

STEREO INPUT MODULES WU-8116

MISCELLANEOUS

ATT1	EVBJY1D15Y14	Attenuator
M600	YWA5WA0649A1	Panel
M601	YWA2KA0330A1	Chassis
M602	YWS5RA0008B3	Knob(X3)
M603	YWS5RB0002B4	Knob(Gray)
M604	YWS5RB0010A3	Knob(Gray)
M605	YWS5RC0002B4	Knob(Yellow)
M606	YWS5RC0010A3	Knob(Yellow X2)
M607	YWS5RE0002B4	Knob(Orange X2)
M608	YWS5RE0003A3	Slide Knob
M609	YWS5RE0009B3	Knob(Green)
M610	YWS5RI0002A4	Knob(White X7)
M611	YWB95WB01	Rubber Foot
M612	YW0CB375	Cord Clamp
M613	YWVJR3	Cord Clamp
M614	YWA2EA0055A4	Guide
M615	YWS5CA0001C4	Card Holder
M616	o YWA7QA1053A4	Main Label

STEREO INPUT CIRCUIT BOARD

IC	YWUPC4570C	IC	
IC1-7	YWNJM5532DD	IC	
IC8,9	MS591	IC	
D101-106	MA711A	Diode	
R1	ERO10TKF7321	Metal	320 ohms 1/8W
R2	ERO10TKF6201	Metal	6.2K ohms 1/8W
R3,4	ER010CKF1001	Metal	1K ohms 1/8W
R5,6	ER010CKF1502	Metal	15K ohms 1/8W
R7,8	ER010CKF1002	Metal	10K ohms 1/8W
R9-11	ERDS2TJ473	Carbon	47K ohms 1/8W
R12	ER010CKF1501	Metal	1.5K ohms 1/8W
R13	ER010CKF4702	Metal	47K ohms 1/8W
R14	ERDS2TJ473	Carbon	47K ohms 1/8W
R15,16	ER010CKF4701	Metal	4.7K ohms 1/8W
R17	ERO10TKF3302	Metal	33K ohms 1/8W
R18,19	ERO10TKF6802	Metal	68K ohms 1/8W
R20,21	ER010CKF2202	Metal	22K ohms 1/8W
R22,23	ERDS2TJ473	Carbon	47K ohms 1/8W
R24,25	ER010CKF4701	Metal	4.7K ohms 1/8W
R26	ERO10TKF1202	Metal	12K ohms 1/8W

SYMBOL NO.	PART NO.	DESCRIPTION	
R27	ERO10TKF2702	Metal	27K ohms 1/8W
R28,29	ER010CKF2202	Metal	22K ohms 1/8W
R30,31	ERDS2TJ473	Carbon	47K ohms 1/8W
R32	ERDS2TJ103	Carbon	10K ohms 1/8W
R33	ER010TKF4872	Metal	48.7K ohms 1/8W
R34	ERO10TKF1052	Metal	10.5K ohms 1/8W
R35,36	ER010TKF4872	Metal	48.7K ohms 1/8W
R37	ERO10TKF1052	Metal	10.5K ohms 1/8W
R38	ER010TKF4872	Metal	48.7K ohms 1/8W
R39	ERDS2TJ473	Carbon	47K ohms 1/8W
R40	ERDS2TJ104	Carbon	100K ohms 1/8W
R41	ER010CKF1002	Metal	10K ohms 1/8W
R42	ER010CKF2202	Metal	22K ohms 1/8W
R43	ERDS2TJ473	Carbon	47K ohms 1/8W
R45	ERO10TKF1003	Metal	100K ohms 1/8W
R46	ERO10TKF1201	Metal	1.2K ohms 1/8W
R51	ERO10TKF7321	Metal	320 ohms 1/8W
R52	ERO10TKF6201	Metal	6.2K ohms 1/8W
R53,54	ER010CKF1001	Metal	1K ohms 1/8W
R55,56	ER010CKF1502	Metal	15K ohms 1/8W
R57,58	ER010CKF1002	Metal	10K ohms 1/8W
R59-61	ERDS2TJ473	Carbon	47K ohms 1/8W
R62	ER010CKF1501	Metal	1.5K ohms 1/8W
R63	ER010CKF4702	Metal	47K ohms 1/8W
R64	ERDS2TJ473	Carbon	47K ohms 1/8W
R65,66	ER010CKF4701	Metal	47K ohms 1/8W
R67	ERO10TKF3302	Metal	47K ohms 1/8W
R68,69	ERO10TKF6802	Metal	47K ohms 1/8W
R70,71	ER010CKF2202	Metal	22K ohms 1/8W
R72,73	ERDS2TJ473	Carbon	47K ohms 1/8W
R74,75	ER010CKF4701	Metal	47K ohms 1/8W
R76	ERO10TKF1202	Metal	1.2K ohms 1/8W
R77	ERO10TKF2702	Metal	22K ohms 1/8W
R78,79	ER010CKF2202	Metal	22K ohms 1/8W
R80,81	ERDS2TJ473	Carbon	47K ohms 1/8W
R82	ERDS2TJ103	Carbon	10K ohms 1/8W
R83	ER010TKF4872	Metal	48.7K ohms 1/8W
R84	ERO10TKF1052	Metal	10.5K ohms 1/8W
R85,86	ER010TKF4872	Metal	48.7K ohms 1/8W
R87	ERO10TKF1052	Metal	10.5K ohms 1/8W
R88	ER010TKF4872	Metal	48.7K ohms 1/8W
R89	ERDS2TJ473	Carbon	47K ohms 1/8W
R90	ERDS2TJ104	Carbon	10K ohms 1/8W
R91	ER010CKF1002	Metal	10K ohms 1/8W
R92	ER010CKF2202	Metal	22K ohms 1/8W
R93	ERDS2TJ473	Carbon	47K ohms 1/8W
R94	ERD50FJ302P	Carbon	3K ohms 1/8W
R95	ERO10TKF1003	Metal	100K ohms 1/8W
R96	ERO10TKF1201	Metal	1.2K ohms 1/8W
R101-112	ER010CKF2202	Metal	22K ohms 1/8W
R113,114	ERD25FJ222P	Carbon	2.2K ohms 1/8W
R115	ERDS2TJ822	Carbon	8.2K ohms 1/8W
R116	ERDS2FJ101	Carbon	100 ohms 1/8W
R117,118	ERO10TKF1692	Metal	1.69K ohms 1/8W
R119	ERO10TKF1202	Metal	12K ohms 1/8W

SYMBOL NO.	PART NO.	DESCRIPTION	
R120-125	ERDS2TJ473	Carbon	47K ohms 1/8W
R126,127	ER010CKF2202	Metal	22K ohms 1/8W
R128	ERDS2TJ473	Carbon	47K ohms 1/8W
VR1	YWAVRA0076A4	Variable Resistor	
VR2,3	YWAVRA0029A4	Variable Resistor	100K ohms(B)
VR4,5	YWAVRA0026A4	Variable Resistor	20K ohms(A)
VR6	YWSVRA0003B4	Variable Resistor	20K ohms(A) 20K ohms(C)
C1,2	YWR0A63V330	Electrolytic	33 µF 63V
C3,4	YWUP05B101KN	Ceramic	100 pF 50V
C5,6	YWUP05S220JN	Ceramic	22 pF 50V
C7,8	YWR0A25V101	Electrolytic	100 µF 25V
C9	YWUP05S150JN	Ceramic	15 pF 50V
C10	YWR0A25V101	Electrolytic	100 µF 25V
C11-13	ECQP1H473GZ	Plastic	0.047 µF 50V
C14	YWUP05S150JN	Ceramic	15 pF 50V
C15	YWR0A25V101	Electrolytic	100 µF 25V
C16	ROA25T470	Electrolytic	47 µF 25V
C17,18	ECQP1H102GZ	Plastic	1000 pF 50V
C19	YWUP05S150JN	Ceramic	15 pF 50V
C20	YWR0A25V101	Electrolytic	100 µF 25V
C21	ROA25T470	Electrolytic	47 µF 25V
C22	ECQP1H333GZ	Plastic	0.033 µF 50V
C23	ECEA1EU100	Electrolytic	10 µF 25V
C24	ECQP1H152GZ	Plastic	1500 pF 50V
C25	ECQP1H333GZ	Plastic	0.033 µF 50V
C26	YWR0A25V101	Electrolytic	100 µF 25V
C27	ROA25T100	Electrolytic	10 µF 25V
C28	ECEA1EU220	Electrolytic	22 µF 25V
C29	YWUP05S220JN	Ceramic	22 pF 50V
C30	YWR0A25V101	Electrolytic	100 µF 25V
C31	ECEA1HU010	Electrolytic	1 µF 25V
C33	YWUP05S220JN	Ceramic	22 pF 50V
C34	ECEA1EU100	Electrolytic	10 µF 25V
C51,52	YWR0A63V330	Electrolytic	33 µF 63V
C53,54	YWUP05B101KN	Ceramic	100 pF 50V
C55,56	YWUP05S220JN	Ceramic	22 pF 50V
C57,58	YWR0A25V101	Electrolytic	100 µF 25V
C59	YWUP05S150JN	Ceramic	15 pF 50V
C60	YWR0A25V101	Electrolytic	100 µF 25V
C61-63	ECQP1H473GZ	Plastic	0.047 µF 25V
C64	YWUP05S150JN	Ceramic	15 pF 50V
C65	YWR0A25V101	Electrolytic	100 µF 25V
C66	YWROA25T470	Electrolytic	47 µF 25V
C67,68	ECQP1H102GZ	Plastic	1000 pF 50V
C69	YWUP05S150JN	Ceramic	15 pF 50V
C70	YWR0A25V101	Electrolytic	100 µF 25V
C71	YWROA25T470	Electrolytic	47 µF 25V
C72	ECQP1H333GZ	Plastic	0.033 µF 50V
C73	ECEA1EU100	Electrolytic	10 µF 25V
C74	ECQP1H152GZ	Plastic	15 pF 50V
C75	ECQP1H333GZ	Plastic	0.033 µF 50V
C76	YWR0A25V101	Electrolytic	100 µF 25V
C77	YWROA25T100	Electrolytic	10 µF 25V
C78	ECEA1EU220	Electrolytic	22 µF 25V

SYMBOL NO.	PART NO.	DESCRIPTION	
C79	YWUP05S220JN	Ceramic	22 pF 50V
C80	YWR0A25V101	Electrolytic	100 µF 25V
C81	ECEA1HU010	Electrolytic	1 µF 50V
C83	YWUP05S220JN	Ceramic	22 pF 50V
C84	ECEA1EU100	Electrolytic	100 µF 25V
C101,102	ECEA1EU101	Electrolytic	100 µF 25V
C105,106	ECEA1EU471	Electrolytic	470 µF 25V
C107-110	ECKR1H472ZF	Ceramic	4700 pF 50V
C111,112	ECEA1EU471	Electrolytic	470 µF 25V
C115	ECQB1H103JZ	Plastic	0.01 µF 50V
C117	ECQV1H333JZ	Plastic	0.033 µF 50V
C118,119	YWUP05S220JN	Ceramic	22 pF 50V
C120	YWR0A25V101	Electrolytic	100 µF 25V
C121-128	ECKR1H472ZF	Ceramic	4700 pF 50V
SW1-4	YWSUN102GSND	Push Switch	
SW5	YWSUN104GSND	Push Switch	
SW7-11	YWSUN102GSND	Push Switch	
SW12	YWSSS322N2	Slide Switch	
F1,2	UN10020	Current Fuse	
M1	YWA2QA0047A4	Electrode	

SOLO SWITCH BOARD

D108	LN217RP	LED
SW6	YWSUN102HSN	Push Switch
M620	YWA3CA0052A4	LED Holder

CHANNEL INDICATOR BOARD

D107	LN317GP	LED
CN-1JM	EMCS0550L	5 pin Jack Male
M620	YWA3CA0052A4	LED Holder

RUN/PEAK INDICATOR BOARD

D5,55	LN117WP23	LED

SYMBOL NO.	PART NO.	DESCRIPTION	
BASIC GROUP/SEND MODULES WU-8117			
MISCELLANEOUS			
ATT1	EVAJY1D15Y14	Attenuator	
M700	YWA5WA0650A1	Panel	
M701	YWA2KA0331A1	Chassis	
M702	YWS5RA0008B3	Knob	
M703	YWS5RA0010A3	Knob	
M704	S5RB0009A3	Knob	
M705	YWS5RE0002B4	Knob	
M706	YWR130-HR02	Knob	
M707	YWB95WB01	Rubber Foot	
M708	YW0CB375	Cord Clamp	
M709	YWVJR3	Cord Clamp	
M710	YWA2EA0055A4	Guide	
M711	YWS5CA0001C4	Card Holder	
M712	o YWA7QA1054A4	Main Label	
BASIC GROUP/SEND CIRCUIT BOARD			
IC1	YWUPC4570C	IC	
IC2	YWMC5762	IC	
IC3	YWUPC4570C	IC	
Q1,2	2SC1844-FE	Transistor	
Q3,4	2SC1318RS-TA	Transistor	
D11-13	MA165	Diode	
D14-19	MA711A	Diode	
R1	ERO10TKF7321	Metal	320 ohms 1/8W
R2	ERO10TKF6201	Metal	6.2K ohms 1/8W
R3,4	ER010CKF1001	Metal	1Kohms 1/8W
R5	ER010CKF1502	Metal	15K ohms 1/8W
R6	ER010CKF1002	Metal	10K ohms 1/8W
R7	ER010CKF1502	Metal	15K ohms 1/8W
R8	ER010CKF1002	Metal	10K ohms 1/8W
R10	ER010CKF2002	Metal	20K ohms 1/8W
R11	ERDS2TJ474	Carbon	470K ohms 1/8W
R12,13	ER010CKF4701	Metal	4.7K ohms 1/8W
R14	ERDS2FJ331	Carbon	330 ohms 1/8W
R15,16	ERDS2FJ101	Carbon	100 ohms 1/8W
R17	ERO10TKF3571	Metal	3.57K ohms 1/8W
R18,19	ER010CKF2001	Metal	2K ohms 1/8W
R20	ERO10TKF1102	Metal	11K ohms 1/8W
R21	ER010CKF1002	Metal	10K ohms 1/8W
R22	ERDS2TJ223	Carbon	22K ohms 1/8W
R23	ER010CKF1002	Metal	10K ohms 1/8W
R24	ERDS2TJ473	Carbon	47K ohms 1/8W
R25	ERDS2FJ101	Carbon	100 ohms 1/8W
R26	ERDS2TJ100	Carbon	10 ohms 1/8W
R27	ERDS2TJ104	Carbon	100K ohms 1/8W
R28	ER010CKF2491	Metal	2.49K ohms 1/8W
R29	ERDS2FJ101	Carbon	100 ohms 1/8W

SYMBOL NO.	PART NO.	DESCRIPTION	
R30	ERDS2TJ752	Carbon	7.5K ohms 1/8W
R31,32	ERDS2TJ473	Carbon	47K ohms 1/8W
R33	ERDS2TJ100	Carbon	10 ohms 1/8W
R34	ERDS2FJ101	Carbon	100 ohms 1/8W
R35	ERDS2TJ103	Carbon	10K ohms 1/8W
R36	ERO10TKF3832	Metal	3.83K ohms 1/8W
R37	ER010CKF1002	Metal	10K ohms 1/8W
R38	ERDS2TJ473	Carbon	47K ohms 1/8W
R39,40	ER010CKF2202	Metal	22K ohms 1/8W
R41,42	ERDS2TJ103	Carbon	10K ohms 1/8W
R43,44	ERDS2TJ122	Carbon	1.2K ohms 1/8W
R45	ERQ12AJ220P	Fuse Resistor	22 ohms 1/2W
R46	ERDS2FJ101	Carbon	100 ohms 1/8W
R47	ERD25FJ122P	Carbon	1.2K ohms 1/8W
R48	ERDS2TJ472	Carbon	4.7K ohms 1/8W
R49	ERDS2TJ224	Carbon	220K ohms 1/8W
R50	ERDS2TJ223	Carbon	22K ohms 1/8W
R51	ERDS2TJ122	Carbon	1.2K ohms 1/8W
R52	ERDS2TJ752	Carbon	7.5K ohms 1/8W
R53	ERDS2FJ101	Carbon	100 ohms 1/8W
R54	ERD25FJ122P	Carbon	1.2K ohms 1/4W
R55	ERO10TKF1102	Metal	11K ohms 1/8W
R56-61	ERDS2TJ473	Carbon	47K ohms 1/8W
R62,63	ERDS2TJ122	Carbon	1.2K ohms 1/8W
R64	ERDS2TJ102	Carbon	1K ohms 1/8W
R65	ERDS2TJ471	Carbon	470 ohms 1/8W
VR1	YWSVRA0004A4	Variable Resistor	
VR2	SVRA0002B4	Variable Resistor	
C1,2	YWROA25T100	Electrolytic	10 µF 25V
C3,4	YWUP05B101KN	Ceramic	100 pF 50V
C5,6	YWUP05S220JN	Ceramic	22 pF 50V
C7	YWROA25T330	Electrolytic	33 µF 25V
C8	YWUP05B331KN	Ceramic	330 pF 50V
C9	YWUP05S560JN	Ceramic	56 pF 50V
C10	YWR0A25V221	Electrolytic	220 µF 25V
C11	ECQB1H103JZ	Plastic	0.01 µF 50V
C12	YWROA25T100	Electrolytic	10 µF 25V
C13	YWUP05S330JN	Ceramic	33 pF 50V
C14,15	YWROA25T330	Electrolytic	33 µF 25V
C16	YWROA25T100	Electrolytic	10 µF 25V
C17	ECEA1EU470	Electrolytic	47 µF 25V
C18	YWROA25T330	Electrolytic	33 µF 25V
C19	YWR0A25V221	Electrolytic	220 µF 25V
C20	YWROA25T330	Electrolytic	33 µF 25V
C21,22	YWR0A25V221	Electrolytic	220 µF 25V
C25,26	ECKF1H103ZF	Ceramic	0.01 µF 50V
C27	YWROA25T100	Electrolytic	10 µF 25V
C28	YWUP05S330JN	Ceramic	33 pF 50V
C29	YWROA25T470	Electrolytic	47 µF 25V
C30,31	ECQV1H333JZ	Plastic	0.033 µF 50V
C32,33	ECEA1ES221	Electrolytic	220 µF 25V
C34,35	ECKR1H472KB	Ceramic	4700 PF 50V
C36,37	ECEA1ES221	Electrolytic	220 µF 25V
C38,39	ECEA1EU101	Electrolytic	100 µF 25V

SYMBOL NO.	PART NO.	DESCRIPTION	
C40,41	ECKR1H472KB	Ceramic	4700 PF 50V
C43	ECEA1EU101	Electrolytic	100 µF 25V
C44	ECKR1H472KB	Ceramic	4700 PF 50V
C45	ECQV1H333JZ	Plastic	0.033 µF 50V
C46	YWUP05B151KN	Ceramic	150 PF 50V
C49	ECQV1H104JZ	Plastic	0.1 µF 50V
L1	YWBF45HW3560	Coil	
SW2	YWSUN102GSND	Push Switch	
RL1	YWAG204344	Relay	
F1,2	YWUN10015	Current Fuse	
J1	ERDS2TC0T	Jamper Resistor	
M1	YWA2QA0047A4	Electrode	

CHANNEL INDICATORBOARD

D20	LN317GP	LED
CN1-JM	EMCS0550L	5 pin Jack Male
M720	YWA3CA0052A4	Parts Holder

SOLO SWITCH BOARD

D21	LN217RP	LED
SW1	YWSUN102HSN	Push Switch
M720	YWA3CA0052A4	Parts Holder

MATRIX MODULES WU-8118

MISCELLANEOUS

ATT1	EVAJY1D15Y14	Attenuator
M800	YWA5WA0651A1	Panel
M801	YWA2KA0332A1	Chassis
M802	YWS5RB0010A3	Knob(Gray X2)
M803	YWS5RD0010A3	Knob(Blue X2)
M804	YWS5RE0002B4	Knob(Orange X2)
M805	YWS5RJ0010A3	Knob
M806	YWR130-HR02	Knob(Red)
M807	YW0CB375	Cord Clamp
M808	YWVJR3	Cord Clamp
M809	YWA2EA0055A4	Guide
M810	YWS5CA0001C4	Card Holder
M811	o YWA7QA1055A4	Main Label

SYMBOL NO.	PART NO.	DESCRIPTION	

MATRIX CIRCUIT BOARD

IC1	YWUPC4570C	IC	
IC2	YWMC5762	IC	
Q1,2	2SC1318-RS	Transistor	
D9-12	MA711A	Diode	
D15-17	MA165	Diode	
R1-8	ERO10TKF3482	Metal	34.8K ohms 1/8W
R9-11	ER010CKF2202	Metal	22K ohms 1/8W
R12	ERDS2TJ473	Carbon	47K ohms 1/8W
R13	ERDS2FJ101	Carbon	100 ohms 1/8W
R15	ER010CKF2491	Metal	2.49K ohms 1/8W
R16	ERDS2TJ104	Carbon	100K ohms 1/8W
R17	ERDS2TJ752	Carbon	7.5K ohms 1/8W
R18	ERDS2TJ473	Carbon	47K ohms 1/8W
R19	ERO10TKF1102	Metal	11K ohms 1/8W
R20	ERO10TKF3482	Metal	34.8K ohms 1/8W
R21	ERD25FJ122P	Carbon	1.2K ohms 1/8W
R22	ERDS2FJ101	Carbon	100 ohms 1/8W
R23	ERDS2TJ752	Carbon	7.5K ohms 1/8W
R24,25	ERDS2TJ103	Carbon	10K ohms 1/8W
R26-29	ERDS2TJ473	Carbon	47K ohms 1/8W
R30	ERQ14AJ100	Fuse Resistor	10 ohms 1/8W
R31	ERD25FJ122P	Carbon	1.2K ohms 1/8W
R32	ERDS2FJ101	Carbon	100 ohms 1/8W
R33	ERDS2TJ472	Carbon	4.7K ohms 1/8W
R34	ERDS2TJ224	Carbon	220K ohms 1/8W
R35	ERDS2TJ223	Carbon	22K ohms 1/8W
R36	ERDS2TJ122	Carbon	1.2K ohms 1/8W
R37	ERDS2FJ101	Carbon	100 ohms 1/8W
R38,39	ERDS2TJ122	Carbon	1.2K ohms 1/8W
VR1-8	YWSVRA0004A4	Variable Resistor	20K ohms(A)
C1	ROA25T100	Electrolytic	10 µF 25V
C2,3	YWUP05S220JN	Ceramic	22 pF 50V
C4	ROA25T330	Electrolytic	33 µF 25V
C7,8	ROA25T100	Electrolytic	10 µF 25V
C9,10	ECEA1EU470	Electrolytic	47 µF 25V
C11	ECQV1H333JZ	Plastic	0.033 µF 50V
C12	ROA25T330	Electrolytic	33 µF 25V
C13,14	YWR0A25V221	Electrolytic	220 µF 25V
C15,16	ECKF1H103ZF	Ceramic	0.01 µF 50V
C19,20	ECEA1EU471	Electrolytic	470 µF 25V
C21,22	ECEA1EU101	Electrolytic	100 µF 25V
C23,24	CKR1H472ZF	Ceramic	4700 pF 50V
C25	ECEA1EU101	Electrolytic	100 µF 25V
C26	ECKR1H472ZF	Ceramic	4700 pF 50V
C27	ECQV1H333JZ	Plastic	0.033 µF 50V
C28	YWUP05B151KN	Ceramic	150 pF 50V
C29,30	ECQB1H103JZ	Plastic	0.01 µF 50V
C31	ECQV1H104JZ	Plastic	0.1 µF 50V
SW2	YWSUN102GSND	Push Switch	
SW3	YWSSS322N2	Slide Switch	
RL1	YWAG204344	Relay	

SYMBOL NO.	PART NO.	DESCRIPTION
F1,2	UN10015	Current Fuse
J1	ERD25TC0	Jamper Resistor
M815	YWA2QA0047A4	Electrode
CHANNEL INDICATOR BOARD		
D14	LN317GP	LED
CN1-JM	EMCS0550L	5 pin Lack Male
M815	YWA3CA0052A4	LED Holder
SOLO SWITCH BOARD		
D13	LN217RP	LED
SW1	YWSUN102HSN	Push Switch
M815	YWA3CA0052A4	LED Holder
ACCESSORY PARTS/PACKAGING PARTS		
M1101	o YWA8QA0807AN	Operating Instruction
M1102	YWA8EA0040A4	Polyethylene Bag for Modules
M1103	YWT20X25C03	Polyethylene Bag for Printed
M1104	YWT050803	Polyethylene Bag for Connector
M1105	YWU8111PHA1A	Packaging for WU-8111
	YWU8112PHA1A	Packaging for WU-8112-WU-8118

SYMBOL NO.	PART NO.	DESCRIPTION